Inuvik Reservoir
Preliminary Engineering

DRAFT REPORT

March 16, 2018

Prepared for:
Town of Inuvik
Inuvik, NT

Prepared by:
Kavik-Stantec Inc.
Inuvik, NT

Project Number: 110126057

KAVIK-STANTEC

Document Limitations

This document entitled **Preliminary Engineering DRAFT REPORT** was prepared by Kavik Stantec Inc. for the account of Town of Inuvik, Northwest Territories (the "Client"). Any reliance on this document by any third party is strictly prohibited. The material in it reflects Kavik Stantec's professional judgment in consideration of the scope, schedule and other limitations stated in the document and in the contract between Kavik Stantec and the Client. The opinions in the document are based on conditions and information existing at the time the document was published and do not take into account any subsequent changes. In preparing the document, Kavik Stantec did not verify information supplied to it by others. Any use which a third party makes of this document is the responsibility of such third party. Such third party agrees that Kavik Stantec shall not be responsible for costs or damages of any kind, if any, suffered by it or any other third party as a result of decisions made or actions taken based on this document.

Discipline Contributions

Jim Oswell, P.Eng. , Geotechnical J M Oswell

Suchit Kaila, P.Eng., Process X

Lee Fleming, P.Eng. HVAC

Jaime Arenas, P.Eng. Electrical X

Peer Review

Ken Johnson, P.Eng.

Independent Review X

Michael Maltais, P.Eng.

K.R. JOHNSON

MAR 1 6 2018

Table of Contents

List of Tables

Appendices

1 INTRODUCTION

This Report has been prepared as part of the new Inuvik water reservoir project. This Draft Report contains summarized research, and analysis for use by the Town of Inuvik. Contained in this document is information that reflect the needs and preferences of the Town collected for the preliminary engineering phase of the project.

1.1 Scope

As part of continuing water system improvements, the Town of Inuvik is planning to construct an additional potable water storage reservoir for the community. The existing water reservoir was constructed in 1976 with a volume of 2,270 cubic metres (500,000 imp Gal) and remains in reasonably good condition. A future reservoir was planned at the time adjacent to the reservoir that was constructed, and funding is now available to support this expansion.

An additional 2,270 cubic metre reservoir will provide Inuvik with operating flexibility for the water system and provide additional potable water storage and fire protection water storage. The new water reservoir is proposed to be constructed adjacent to the existing reservoir tank facility at Hidden Lake in Inuvik, NT. The reservoir will be similar to the existing above-ground reservoir, with a proposed diameter of 15.5 metres and height of 12 metres. The Inuvik reservoir will be supported on an insulated subgrade to protect the existing thaw sensitive permafrost, with consideration of the design criteria applied to the existing Inuvik reservoir, which was constructed on a ventilated pad.

Two possible sites, in close proximity to the existing reservoir, were proposed for the new reservoir, one site to the west of the existing reservoir, and the other site to the north of the existing reservoir. Both sites are presently treed. A geotechnical review of the proposed sites included a desktop study, a detailed air photo review, mapping of surficial geology and geomorphology, and an intrusive site investigation. The site investigation included six boreholes, with the collection of soil samples, and subsequent soil laboratory testing. Ground temperature cables were installed in four of the boreholes to help define and monitor the geothermal conditions in the soil beneath the reservoir sites.

1.2 Site Inspection

To gather additional information, an operations and site reconnaissance trip was completed in September, 2017 by Suchit Kaila, P.Eng., (process engineer), and Jaime Arenas, P.Eng. (electrical and instrumentation engineer) **(See report in Appendix B).**

The intent of the on-site visit in Inuvik was to gather information necessary to complete this study and to highlight project constraints.

Taking full advantage of time in Inuvik, inspections of the area around the existing water tank was completed, along with inspections of the Valve House facility. Meetings were also held with Rick Campbell, Utilities Manager.

2 WATER RESERVOIR FACILITY

2.1 Reservoir Description & History

The Town of Inuvik is currently being served by a new water treatment facility located along the East Channel of Mackenzie River. The previously used water supply from the Hidden Lake and Three Mile Lake remains serviceable, but is no longer being used. The Town intends to decommission the structures at Hidden Lake in the future. These structures are approximately 60 years old and are at the end of their service life.

Treated water is stored in a 2,275 m^3 above ground storage insulated welded steel reservoir located near Hidden Lake water source, and provides-a gravity distribution system. A Water Master Plan was completed in 2013 and reported on storage requirements.

Storage requirements were calculated in accordance with the 2004 NWT Public Works and Services, Good Engineering Practice for Northern Water and Sewer System. The required duration for fire flow was taken from Water Supply for Public Fire Protection, Fire Underwriters Survey (FUS). 1999. The storage volume requirements for the existing development condition include fire storage, equalization storage and emergency storage. The total storage required as per Good Engineering Practice, NWT and FUS is approximately 1,800 m^3. Therefore, the existing reservoir has a surplus storage of 450 m^3 and it meets the minimum storage requirement.

The storage volume requirements to account for the future development include fire storage, equalization storage and emergency storage, the total storage required as per Good Engineering Practice, NWT is approximately 2,300 m^3. When the sole existing reservoir is taken out of service as needed for inspection and maintenance, the Town has almost no fire and other emergency storage.

The existing welded steel reservoir, is over 40 years old and may be subject to corrosion at any place that the liner has cracked or peeled, and a significant repair may be required. This scenario may take the reservoir out of services for a significant period of time, and a backup storage facility is needed to maintain the level of service for drinking water supply and fire protection.

As-built drawings of the existing water storage tank, as prepared by Associated Engineering Ltd, originally dated June 1976, provide the following information:

- The tank is 15.5 metres (50 feet) in diameter, and 12 metres (40 feet) tall
- The tank walls consist of a 6.3 mm (0.25”) thick welded steel plate and the tank roof consists of 5.6 mm (0.22”) thick weld steel plate
- The tank wall is covered with 2.5” rigid insulation, and metal cladding. The tank roof is covered with 4” of rigid insulation and a protective coating.
- The tank roof was designed in a domed shape.

2.2 Condition of Existing Reservoir and Design Criteria

The foundation system for the existing storage tank appears to have performed reasonably well over the past 40 years. No major problems have been noted in any construction records or other available documentation. Based on the construction records, the 2.1 metre fill pad was constructed as follows:

- A base fill of 1120 mm (44 inches) consisting of silty gravel was placed, with the sideslopes at 2H:1V. This material is probably consistent with the pitrun gravel typically seen in Inuvik in the present day. This material has a fines content in the order of 25%;
- A 40 mm (1 .5 inches) thick sand cushion was then placed over the base fill, with a polyethylene vapour barrier placed on top, followed by 75 mm (3 inches) of Styrofoam insulation and another 50 mm (2 inches) of sand;
- A series of 460 mm (18 inch) diameter, 14 gauge, galvanized metal culverts were then placed on the sand at 1067 mm (42 inches) on centre, and backfilled with a total thickness of 560 mm (22 inches) of crushed rock fill, followed by another 75 mm of insulation;
- Finally, a 150 mm (6 inch) thick layer of crushed rock fill was placed, topped by a 50 mm (2 inch) thick layer of fine crushed rock surfacing, which extended down the sideslopes of the fill pad.

Staff from the Town of Inuvik state that the overall performance of the existing water reservoir has been good. Some minor settlement has been observed and some of the passive ventilation ducts have experienced bending, such suggests mid-span settlement. Photographs of the ventilation ducts from late summer 2017 show some ducts with covers and other that are open. It is not known if the Town is actively installing the duct covers in spring and removing them in fall, as would be normal and expected operating procedure.

The reported good performance of the foundation for the existing reservoir is likely due to the lack of thermal degradation of the subgrade. This lack of thaw, typically reflected by an increase in the thickness of the seasonal active layer is likely attributed to the very high ice-content of the soils and the presence of a thick ice layer immediately below the active layer. The presence of this ice layer severely impedes the progression of the thaw front into the subgrade. While thawing of the permafrost soils may not have occurred in recent decades, ground warming toward the freezing point can take place, resulting in increased creep settlement of the icy subgrade soils. Creep settlement may be a factor in the reported deformation of some of the existing ventilation ducts.

Although the existing water reservoir tank is understood to have performed adequately over its 40-year life, the ongoing influence of climate change means that the design of any new structure will need to consider the likelihood of continued warming of the permafrost. This is particularly critical in areas that are thaw sensitive and contain large ice formations, which are the conditions at the proposed site. There is also a potential for thaw settlement deformations under the existing reservoir foundation due to long-term ground warming

3 RESERVOIR ALTERNATIVES ANALYSIS

3.1 Reservoir Location

Two possible reservoir sites, near the existing reservoir, were proposed for the new reservoir, one site to the west of the existing reservoir, and the other site to the north of the existing reservoir **(See Report in Appendix E).** Both sites are presently treed. A geotechnical review included a desktop study, a detailed air photo review, mapping of surficial geology and geomorphology, and an intrusive site investigation. The site investigation included six boreholes, with the collection of soil samples, and subsequent soil laboratory testing. Ground temperature cables were installed in four of the boreholes to help define the geothermal conditions.

NEHTRUH-EBA Consulting Ltd. (2017) undertook a geotechnical investigation at two sites near the existing reservoir, one site being nominally to the “north” and one site being nominally to the “south” of the existing reservoir. The subsurface conditions at both sites were generally similar; as the “south” site has been selected for the new reservoir, the subsurface conditions at that site will be described herein.

As part of the site investigation two boreholes were drilled at the south site (while four boreholes were drilled at the “north” site). The depth of the boreholes were 18.0 m and 18.3 m. The generalized stratigraphy consisted of a thin layer of surficial organics (peat) underlain by sand or clay or silt till to the full depth of the boreholes. Ice, either as discrete crystals or inclusion or massive lenses was encountered in the upper 6 m in both boreholes. Water contents of the soils exceeded 500% in some samples. The soils are considered ice-rich (excess water on thawing of the frozen soil) for the entire depth of the boreholes.

Both sites are considered equally suitable for a new storage tank, with consideration of the appropriate permafrost related foundation design for the tank. The tank at the south side of the existing tank was selected as a more appropriate site in consideration of is proximity to the existing Valve House and the opportunity to operate the new tank at the same water level as the existing tank and provide a simple gravity operation between the two tanks **(See Report in Appendix C).**

3.2 Reservoir Construction

Above ground metal tanks generally have two options for tank construction, namely bolted steel construction and welded steel construction. Bolted Steel Tanks offer some potential advantages associated with:

- Tanks erection time – Bolted Steel Tanks may be up to than 50% faster to install than Field Welded Steel Tanks, which require rigging, fitting, welding, blasting and coating processes.

- Tank repair - Bolted Steel Tanks may be repaired in the field with either touch up epoxy, sealant or by replacing a single panel, whereas Field Welded Steel Tanks require more time and are more costly to repair, if repairs are required, due to preparation and coating issues.
- Tank price - Bolted Steel Tanks provide less upfront costs, less installation costs and less maintenance costs than their Field Welded Steel Tanks.

However, the advantage of vantages of Field Welded Steel Tanks include:

- Longevity – Welded steel tanks are highly resistive to the effects of corrosion and other natural elements like heat. Welded steel also remains ductile through all temperature ranges, is fire resistant, and is unaffected by exposure to UV light, which can damage paint and other coatings. properly maintained welded steel reservoirs may have an expected lifespan of over 100 years, whereas bolted steel tanks only survive around 30.
- Durability - Welded steel tanks are leak-free and stronger, which is important, because not only can a crack jeopardize the integrity of a tank's structure and make for an expensive, lengthy repair but, also, if a crack is left untreated, moisture will collect, bacteria can form, and the sanitation of water may be compromised. In addition, bolted steel tanks also pose a risk, as every bolt on the tank represents a potential point of weakness.
- Cost - With welded steel tanks having a longer life cycle and requiring much less maintenance, the total cost of ownership (TCO) of a welded steel tanks is often lower than its bolted steel over the long term. Welded tanks are more tolerant of movement of the support base than bolted tanks, without leaking.

An additional consideration is the performance of the 40 year old existing welded steel tank in Inuvik. The existing tank has performed well over the past 40 years and with some remedial work, may have a service life that expects well in to the future.

A welded steel water reservoir design is the most appropriate consideration for the new reservoir because it is an appropriately robust structure for a long-lasting water retaining vessel. The structure has some, limited flexibility, and therefore can accommodate some differential ground movement, however, this movement should be limited to less than 15 millimeters.

3.3 Reservoir Foundation

For the characteristics of the water reservoir, the geotechnical report recommended the use of a thermosyphon stabilized foundation pad as the most technically appropriate method of providing a tank foundation that will be stable throughout the intended service life. Of importance to this recommendation is that local evidence clearly indicates that the ground temperatures in Inuvik are warming, which will negatively influence the thaw sensitive permafrost at the new reservoir site.

There is however, local and regional evidence that thermosyphons may have issues and may not be an appropriate solution by themselves. For example, in Inuvik, there have been issues with thermosyphon systems at the Young Offenders facility, the Swimming pool, and the Hospital. On a regional scale, the thermosyphon system associated with the Recreational Facility in Dawson City. We understand that the issues with the Young Offenders and the Dawson City arena are both design/construction issues, associated with vertical undulations in the thermosyphon piping. Stantec is not aware of the issues are for the Rec Centre and Hospital, but these facilities have horizontal loop systems.

In consideration of these issues and in consideration of the performance of the foundation system for the existing water reservoir, Stantec is proposing to advance the design of an adaptive foundation system, which has inherent contingencies to respond incrementally to climate change influences. The starting point for the adaptive system will be the proposed foundation system presented in the geotechnical report.

As noted in the recommended foundation system, granular fill provides the fundamental element of the foundation system. Supplementing the granular fill are an insulation element and a thermosyphon element.

Stantec is proposing an adaptive design with 2 to 3 contingencies that allow for incremental increases in the freeze protection of the existing ground. The first element will be a vented foundation, like the foundation for the existing reservoir. A vented engineered pad foundation may be passive or active. The passive system would rely on natural ventilation during the winter months to cool the foundation, and would be closed off to outside air during the summer months. The active system would employ a fan or some similar technology to actively cool the foundation during the winter months and would be closed off to outside air during the summer months. The second element of the adaptive design would be the thermosyphon system, which could be partially installed and not "activated" until the thermal conditions in the foundation system warranted the additional cooling.

Monitoring of the temperature within the reservoir foundation and the ground below it will be the indicator of "if and when" the thermosyphons are needed.

4 FOUNDATION SYSTEM DESIGN

The foundation design for the reservoir will consider several aspects. These are the analysis of an insulated, passive ventilated engineered granular pad, and adapted design strategies to allow mitigations to be applied to address future climate warming or permafrost degradation impacts.

The 2010 CSA design standard for permafrost foundations recommends that new structures consider the impact of climate change (warming) on foundation design and performance. To address this need a geothermal model with climate warming is incorporated into the design. The climate warming rate is based on a linear projection of historical air temperature data for the past 35 years. Over the next 30 years, the air temperature is estimated to rise about 2.7°C.

To address the potential for undesirable permafrost degradation under the reservoir foundation, several adaptive strategies are also incorporated in the design. Adaptive strategies are design details that are incorporated into the construction of the structure that can be used in the future to facilitate the retrofitting or implementation of mitigation. By incorporating these strategies as part of initial construction, future capital costs and interruptions of operation may be reduced.

It is understood that the proposed water reservoir structure will be the same design as the existing facility. The 2270 m^3 tank will be constructed on a 2.1 m thick engineered embankment, into which two layers of insulation and 457 mm corrugated metal conduits are installed. The engineered fill embankment will comprise crushed gravel, typically 20 mm minus, well-graded with less than 10 percent fines.

4.1 Geothermal Modelling

A commercial geothermal software TEMP/W was applied for geothermal modeling of the proposed water reservoir structure and subgrade (**See report in Appendix D**). The TEMP/W model is a finite element program designed to solve complex heat-transfer problems including phase change, and incorporates both conductive and convective heat transfer. The surface boundary conditions incorporated a user specified surface energy balance to model the effects of seasonal air temperature, wind, albedo, and snow cover.

A finite-element grid for the problem was prepared. The model is set-up in two dimensions with the model domain centered on the vertical axis of the tank. The grid extended 46 m from the centre of the tank and over 25 m vertically. The baseline conditions were simulated for 10 years, and then the water reservoir and engineered embankment were instantaneously applied in the fall of year 10. The water reservoir was assumed to have a fixed annual temperature of +5°C. Passive ventilation ducts were buried in the embankment, similar to the existing reservoir. Two layers of rigid polystyrene insulation were also installed in the embankment.

The surface energy parameters, notably the thermal conductivity of the snow was adjusted to achieve baseline conditions reflecting the current thermal regime, which were a mean annual ground temperature of about -2°C and an active layer depth of about 1.4 m.

The wind speed through the ventilation ducts was set at 5% of the mean wind speed as reported by Environment Canada, climate normal.

The geothermal scenarios considered for this project included the following:

- Ventilation ducts open all-year round; no climate warming
- Ventilation ducts closed all-year round; no climate warming
- Ventilation ducts open in winter and closed in summer; no climate warming
- Ventilation ducts open all-year round; climate warming applied

Although the design concept for this project is that Town of Inuvik staff will actively maintain the ventilation system, cleaning the ducts of debris and removing covers in fall and installing covers in spring, as a maintenance exercise, it was appropriate to consider potential non-compliance by maintenance staff and the impact on the geothermal regime.

The geothermal modeling indicates that melting of the ice-rich permafrost is not likely to develop under all of the geothermal scenarios.

Creep settlement in the existing subgrade may occur because of stresses imposed on ice-rich permafrost that may be under the tank by the construction and the weight of the foundation system and water reservoir. The exact amount of this settlement is difficult to predict because the exact extent of the ice in the subgrade and its temperature regime in the long-term is uncertain; however, the performance of the existing tank suggests that over the past 40 years any creep settlement has been relatively uniform, and therefore differential settlement will likely be a fraction of the total creep settlement.

4.2 New Reservoir Foundation Design

For the foundation of the proposed water reservoir, the design should comprise the following elements:

- A base fill of approximately 1100 mm consisting of 20 mm minus gravel with a fines content of less than 10%. The side slopes of the embankment should be 2H:1V.
- A 38 mm to 50 mm layer of sand is installed with a polyethylene vapour barrier placed on top, followed by 75 mm of extruded polystryene insulation and an additional 50 mm layer of sand;
- A series of 457 mm diameter, 14 gauge, galvanized metal culverts are placed on the sand at approximately 1100 mm on centre. The culverts should be embedded in 20 mm minus gravel with a fines content of less than 10% with a total thickness of 550 mm.
- A layer of bedding sand, 38 mm to 50 mm thick is placed over the gravel layer. A suitable geotextile may be recommended to limit migration of the sand into the underlying gravel layer.

- A second layer of 75 mm thick extruded polystyrene insulation is placed on the sand. A 50 mm sand cover is placed over the upper insulation.
- A 100 mm thick layer of 20 mm minus gravel is placed over the sand and topped by a 100 mm thick layer of 50 mm minus gravel surfacing, which extended down the sideslopes of the fill pad.

The total thickness of the embankment is 2100 mm to 2150 mm. The crest engineered embankment should extend laterally at least 2 m from the exterior edge of the reservoir.

All fill materials should comprise well-graded granular soils with less than 10 percent fines (particles smaller than 0.08 mm). All fill should be placed in thin lifts and compacted to at least 100% of Standard Proctor maximum dry density at a water content ±1% of optimum.

The engineered embankment may have constructed directly over the native subgrade and organic mat, providing all trees, stumps and root-balls are removed. If desired, a suitable geotextile may be placed over the native subgrade to provide separation between the subgrade and engineered fill. No fill materials should be placed in freezing temperatures nor when contaminated by snow or ice.

The engineered embankment, as described herein will have an allowable bearing capacity of 200 kPa.

4.3 System Maintenance and Monitoring

The ventilation ducts should be orientated to the prevailing winter winds, which are east-west, which is derived from the winter wind rosette for the Inuvik airport. The rosette shows that during winter, winds most often blow in the west – east direction. Thus, the ventilation ducts would be most effective when orientated west-east. The culverts should extend a suitable distance from the edges of the engineered embankment so that embankment materials do not slough or fall into the ducts.

Regular maintenance of the ventilation ducts is important to the long-term successful performance of this foundation. The ducts should be closed in spring when the daily air temperature consistently rises above freezing and should be opened in fall when the daily air temperature consistently falls below freezing. The ducts should be cleaned of all debris to allow free flow of air. Grasses and shrubs should not be allowed to grow around the ventilation duct openings as this will reduce air flow.

An important aspect of foundation design is the monitoring of long-term performance. It is recommended that the existing thermistor cables installed by Nehtruh-EBA as part of the 2017 geotechnical investigation be maintained and monitored during the life of the project.

In addition, two multi-bead thermistor cables should be installed horizontally on the native ground surface prior to construction of the engineered foundation pad. To reduce the possibility of damage to the thermistor cables, a small diameter metal conduit could be installed, into which the thermistor cable is installed after the foundation pad construction is completed.

All thermistor cables would be read seasonally (four times per year) and the ground temperatures assessed for changes and trends that may warrant additional study and implementation of mitigation.

4.4 Adaptive Foundation Design

The historical air temperature warming rate for Inuvik is about 0.09°C/year. In the past several decades, the mean annual air temperature has increased several degrees and the ground temperatures have increased.

Historical published literature suggests the typical mean annual ground temperatures in the Inuvik region should range from -1°C to -5°C depending on the ground cover and surface disturbance. Recent literature supports the presence of warmer ground temperatures than the historical “normal” ground temperatures. It is reported that ground temperatures in some areas of the Mackenzie Delta are presently 2.5°C warmer than in 1970.

In the event air and ground temperatures continue to warm, the efficiency of a passive ventilated pad to perform satisfactorily, particularly over ice-rich soils is potentially compromised. Given the presence of massive ice, warming of the ground more than that estimated by the geothermal modeling reported here could result in significant creep or thaw settlement of the engineered pad and ground surface subsidence as the ice layers warm and/or melt.

To mitigate the potential for adverse performance of the pad and water reservoir structure resulting from climate warming, the incorporation of adaptive strategies is recommended. This approach means that the current design should envision future modifications that can be implemented without significant capital cost or significant disruption of the infrastructure.

One adaptive strategy is to incorporate into the design and construction the ability to install horizontal thermosyphons. This would be accomplished by placing 40 mm to 50 mm diameter steel conduits across the base of the engineered granular pad, into which 20 mm diameter thermosyphon evaporator tubing could be installed. The conduits would be placed at 1 m apart. These conduits should be of appropriate strength to withstand the applied loads of the engineered embankment and water reservoir. They should be sealed to provide ingress of water, debris and animals.

If ground temperature monitoring and other observations indicated that the water reservoir was at risk of experiencing structural distress due to foundation instability, the thermosyphons could be installed to chill the ground and increase the thermal stability of the subgrade.

A second adaptive strategy is to install thermostatically controlled fans on the ventilation ducts. These fans would blow cold winter air through the ducts providing greater cooling of the subgrade. Design methods are available to estimate the air flow volume and fan size for most efficient performance.

5 PROCESS PIPING DESIGN

The process piping for the new reservoir will connect to the existing piping system in the Valve House. This connection in conjunction with the identical operating water levels in the existing and the new reservoir will accommodate a relatively simple hydraulic operating system for the two reservoir supply to the Town of Inuvik.

The existing piping in the Valve House was designed and installed to facilitate tie-ins for the future potable water tank addition. However, the existing tie-in point for the 300 mm fill/draw connection for the new tank is opposite to the building door and will create accessibility concerns if new 300 mm diameter piping is connected to this available tie-in point.

Based on the location of new potable water tank, the interconnecting process water piping is designed to enter the building near the south-east corner of the building. The fill/draw piping for the new tank runs along the east wall of the building and a new tie-in point will be created on the existing Tank #2 fill/draw line near the north-east corner. This will require some downtime for the Tank #2 when the final connection of new potable water tank is made to the existing piping. The existing Tank #2 fill/draw piping has a straight pipe piece connected with Victaulic couplings on either side. A new pipe spool of same size with a tee connection will need to be fabricated off-site to replace the existing pipe spool so that the potable water supply downtime is minimized.

The new fill/draw piping is designed to match the intent of original design. A 300 mm diameter tee connection with isolation valves on each side is provided to connect the future water distribution main for the Town. The Town will be able to either use this new connection or the existing 300 mm diameter connection opposite to the building door for connecting the future water distribution line.

The 200 mm diameter overflow line enters the building near the south-east corner and connected to the available tie-in point on the existing overflow piping for Tank #2. The tank fill/draw line is also connected to overflow line complete with isolation valve near the tie-in point. The 150mm diameter tank vent line also enters the building near the south-east corner.

The new potable water piping plan and P&ID are shown on drawings P201 and P601 respectively.

6 FREEZE PROTECTION DESIGN

6.1 Existing Heating Plant

The existing heating plant is installed in the Valve House has historically provided heating to the Valve House, Hidden Lake Water Treatment Plant (filter and storage tanks), Hidden Lake Pumphouse and the 2,275,000 litre (500,000 imp gallon) above ground reservoir. The Hidden Lake Water Treatment Plant and the Hidden Lake Pumphouse are no longer in service, and therefore no longer require heating.

The heating plant includes two oil fired boilers, two (2) in-line primary recirculation pumps, a shell and tube heat exchanger (for reservoir tank heating) and terminal heat (e.g. unit heaters and/or baseboard radiation) located in the various buildings. The two (2) boilers are oil fired commercial grade low pressure, low temperature hydronic Weil McLean™ model BL678 boilers rated at 164 kW net I-B-R. The boilers were reportedly installed in about 1997. Typical service life for an oil-fired boiler is in the order of 30 years[1].

The heat exchanger is a double walled shell and tube S.A. Armstrong model WXG-83-28-1-BRZ heat exchanger rated at 161 kW. The heat exchanger was installed in 1997.

6.1.1 Heating Loads

Table 6-1 below is a preliminary summary of the current and new heating loads expected at the Valve House. Note that the reservoir heating loads were calculated assuming skin loss only and do not include an allowance for additional tempering of the water, e.g. heating the water from 5°C to 10°C

Table 6-1 Estimated Heating Load

Building	Heating Load	Comments
Valve House	10 kW	Per RCPL[2] report
Existing WTP	0 kW	Building to be abandoned
Utilidor	7 kW	Per RCPL report
Pumphouse	0 kW	To be abandoned
Existing reservoir	30 kW	Skin loss only
New reservoir	30 kW	Skin loss only
TOTAL Heating Load	**77 kW**	

---

[1] ref. RS Means Facilities Maintenance & Repair Cost Data manual
[2] Reference 1997 RCPL design memo dated April 25, 1997.

6.1.2 Existing Reservoir Heating System

The existing reservoir is heated using tempered treated water drawn from the tank at mid elevation through the existing shell and tube heat exchanger in the Valve House and back to the reservoir bottom via a series of flow nozzles. The flow nozzles are installed at low level inside the tank and ensure circulation and mixing within the tank.

Water is pumped from the reservoir tank through two existing recirculation pumps (P3 & P4). Capacity of these pumps will be reviewed during detailed design, but at this time, it is assumed that the pumps operate as a lead/standby mode and have sufficient capacity to deliver tempered water to both reservoirs.

6.2 New Reservoir Heating System Scenario without Reheat Capacity

The existing heating system serving the existing reservoir appears to work well and, is simple and easy to maintain. One heating system scenario would be to design the new reservoir based on the same principal, i.e. draw from mid elevation and pump into manifold nozzles at low level.

In this scenario, reheat of the water in the two reservoirs would not be included. The existing heating plant and existing heat exchanger have sufficient capacity to accommodate freeze protection in the new reservoir. If the existing boilers have been regularly maintained, they may still have another 10 years of normal life. However, the boilers are obsolete and will be difficult to upgrade or replace in the future.

6.3 New Reservoir Heating System Scenario with Reheat Capacity

Alternate heating system scenario would be to design a new system with reheat capacity. With this scenario, the existing heating plant is likely undersized and will require upsizing and upgrading. Since the existing Valve House is space constrained, additional building space will be required to develop this scenario. In principle, since the existing Hidden Lake Water Treatment Plant is obsolete and no longer required, a new oil-fired heating plant could be installed in the Hidden Lake Water Treatment Plant building, however, the Town of Inuvik intends to decommission the Hidden Lake Water Treatment Plant and the Hidden Lake Pumphouse.

The heating requirements to accommodate reheat capacity are as follows:

- Valve house = 10 kW
- Utilidor = 7 kW
- Reservoir 1 (exist) = 80 kW (skin loss and reheat)
- Reservoir 2 (new) = 80 kW (skin loss and reheat)
- New boiler room = 10 kW
- TOTAL = 187 kW

Based upon these heating and reheating requirements, two (2) boilers at minimum 187 kWt each output or 3 boilers at 95 kWt each would be appropriate. If two boilers are applied, each boiler should have 100 percent of the load capacity. If three boilers are applied, 2 boilers, each with 50 percent of the load capacity providing heating with 1 boiler backup. The heat exchange capacity would be 160 kWt to accommodate the skin loss and reheat for the two reservoirs.

To accommodate the scenario with reheat capacity a new building will be required to accommodate the new boilers. This new structure may be a modular structure adjacent to the Valve House.

7 INSTRUMENTATION & CONTROL DESIGN

7.1 Electrical Design

An existing 120/208V 225 Amp Panel-A provides power to the Valve House and is housed inside the Valve House. The Panel-A is fed from 100Amp breaker in the Hidden Lake Water Treatment Plant building, which is expected to be decommissioned and demolished in the near future. The existing panel-A does not have the capacity to feed the infrastructure systems associated with the new reservoir (heating, instrumentation, and mechanical equipment). In additional, there is no space available in the Valve House to add any new electrical equipment to meet the latest code and regulation requirements.

The existing four (4) motor starters for glycol pumps and recirculation pumps will need to be relocated to provide space for the process piping for the new tank. It is recommended that the existing four motor starters be decommissioned, and a new Motor Control Center (MCC) be installed in a new modular building space. The new MCC will be equipped with main feed breaker, motors starters to feed the existing and new process mechanical loads and will also have provisions for future expansion.

There are two options to feed the new MCC in a new modular building space. Option 1 is to run new power cables from the Hidden Lake Water Treatment Plant building existing 400Amp splitter with a new breaker to the new MCC via the existing utilidor. The load study for the whole facility will be conducted to ensure that the existing 400Amp main breaker, 400Amp splitter and utility transformer have enough capacity to feed the new MCC. From the preliminary load study, the existing 400Amp splitter and 400Amp breaker will need to be replaced since they don’t have the enough capacity to feed the new process mechanical and new building extension loads.

Option 2 is to feed the new MCC in the extended building directly from the overhead utility power. The load study of the facility will be required to ensure existing overhead utility transformer has enough capacity. This option will require the installation of new overhead power cables from the utility transformer to the new building extension, new utility meter and modification to the building exterior to accommodate the new main power cables.

The coordination with utility is required for both options. Existing panel-A can either remain fed from the filter room 400Amp splitter or it can be fed from the new MCC. The existing panel-A circuits will be reused to feed the new extension building loads such as heating and lighting.

It is recommended that the Town of Inuvik advances Option 2 and feed the panel-A from the MCC. The cost of implementing this will be a bit higher but it will have some significant benefits i.e. the Valve house will be independent of the Hidden Lake Water Treatment Plant building, which can be demolished/ decommissioned in future without interfering with Valve house operations.

It is also recommended for the installation of new generator tie-box and a manual transfer switch, so the Town can keep the system running in case of unexpected or planned power outages.

Convenience receptacles will be installed in the interior and exterior of the building, and near the new tank. The convenience receptacle locations, quantities and ratings will be confirmed in detailed design. The existing UPS (Eaton 1500VA) in the PLC Cabinet has enough capacity to feed the new process mechanical loads. The addition of new loads might affect the UPS backup time so extended battery module might be needed which will be verified in the detailed design.

All electrical or electronic equipment's will be supplied with equipment's specifically designed to control and remove all adverse power quality conditions which could damage or impair their functionality. The adverse power quality conditions such as voltage surges, voltage sags, voltage transients, harmonics, power factor, and radio frequency interference will be addressed but not limited to.

The existing grounding system will be tested in the field to ensure it meets the latest Canadian Electrical Code and the local inspection authority else it will be replaced with new grounding grid. The extended new building will be provided with a new ground grid per the latest codes and regulations and will be bonded to existing valve house grounding.

The new extension building interior and exterior and top of the tank will be provided with LED fixtures. All emergency lighting and life safety equipped will have battery packs.

The lightning protection design for the new reservoir tank and the new building will be considered in the detailed to protect the facility from direct lightning strikes. All the new electrical equipment will be provided with seismic retrains to provide protection during earthquakes.

7.2 Instrumentation and Control Design

Instrumentation and controls are an important part of the new reservoir to provide the necessary systems for the operation of the new two reservoir system. The new reservoir tank will be equipped with two level measurement and two temperature measurement instruments to provide backup in case one piece of equipment fails. The level transmitter will provide the instantaneous tank levels and will be installed at the top and bottom of the tank. The level radar sensor will be installed at the top of the tank and the differential pressure switch will be installed near the bottom of the tank. Both level temperatures will be monitored at the PLC and will compare the two readings and generate an alarm when there is an anomality between the two levels.

The two temperature transmitters will be installed at the top and bottom of the new reservoir tank. They will provide the instantaneous temperatures of free space at the top and the water from bottom inside the new tank. Both temperatures will be recorded at the PLC and will compare the two temperatures and generate an alarm notification to the operate when there is anomality in the two temperatures.

The exact location and installation details of the level and temperature sensors will be finalized in the detailed design, but their respective transmitters will be installed in a new modular building space.

The new MCC will be equipment with ethernet switch to communicate with all starters in the MCC lineup and they will communicate all the information to PLC via ethernet communication.

The existing hardwired alarm notification/ dialer system (AD-200) can provide four alarm signals only to the designated numbers. It is recommended replacing it with newer ethernet based system to communicate with PLC so more operation information may be provided to the operators. The existing antenna radiation pattern, antenna gain, impedance, bandwidth, and polarization will be tested in field to ensure it meets the desired output else it would have to be replaced.

It has been assumed that the town of Inuvik will provide the latest version of the PLC drawings. The existing PLC cabinet has enough space to add more IO modules and terminal block to monitor and control the existing and new process mechanical and building loads.

The replacement of existing chlorine analyzer with certified one to inject sample back into the treated water line instead of draining to waste will require addition of new injection pump as requested during site visit. The new injection pump is required to provide the required pressure to inject the sample back in the treated line.

The existing monitoring and control instruments are obsolete or outdate per the site visit listed below.

1. Existing reservoir tank temperature and level measurement instruments.
2. Replace the existing instruments such as door intrusion switches, temperature transmitter and fuel level to provide feedbacks to the PLC.

It is recommended to replace the existing door switch and It would be worth investigating to see the operational and cost impacts by replacing these outdated/ obsolete instruments at the same time in the detail design

8 OPINION OF PROBABLE COST (BUDGET ESTIMATE)

Based upon the preliminary engineering discussion in the previous sections of the report, the following Opinion of Probable Cost is presented.

Table 8-1 Preliminary Cost Estimate for complete construction

Item #		Unit	Price Per Unit	# of Units	Cost
1	Mobilization & Demobilization	ea	$100,000	1	$100,000
2	Clearing & Base Preparation	m^2	$10	800	$8,000
4	Base Construction	m^3	$50	1,400	$70,000
5	Board Insulation (2 layers)	m^2	$50	1,000	$50,000
6	Ventilation Culverts	m^2	$150	500	$75,000
7	Sand Bedding	m^3	$60	100	$6,000
8	Vapour Barrier	m^2	$120	360	$43,200
9	Thermosyphon Conduit	m	$100	300	$30,000
10	Thermistors	ea	$200	12	$2,400
10	Insulated Welded Steel Reservoir	ea	$1,250,000	1	$1,250,000
11	Modular Building	ea	$150,000	1	$150,000
12	HVAC	ea	$150,000	1	$150,000
13	Electrical and I+C	ea	$150,000	1	$150,000
14	Process Piping	ea	$75,000	1	$75,000
15	Connecting Piping	m	$10,000.00	6	$60,000
16	Engineering and Contingency (25 %)				**$554,900**
	Total Cost				**$2,675,500**

Table 8-2 Preliminary Cost Estimate for Tank construction only

Item #		Unit	Price Per Unit	# of Units	Cost
1	Mobilization & Demobilization	ea	$100,000.00	1	100000
2	Clearing & Base Preparation	m^2	$10.00	800	8000
4	Base Construction	m^3	$50.00	1400	70000
5	Board Insulation (2 layers)	m^2	$50.00	1000	50000
6	Ventilation Culverts	m^2	$150.00	500	75000
7	Sand Bedding	m^3	$60.00	100	6000
8	Vapour Barrier	m^2	$120.00	360	43200
9	Thermosyphon Conduit	m	$100.00	300	30000
10	Thermistors	ea	$200	12	30000
11	Insulated Welded Steel Reservoir	ea	$1,250,000.00	1	1250000
12	Engineering and Contingency (25 %)				**$415,550**
	Total Cost				**$2,077,750**

9 CONCLUSIONS AND PROJECT SCHEDULE

Based upon the preliminary engineering discussion in the previous sections of the report, the following comments on constructability and schedule may be applied for the implementation of the new water reservoir for the Town of Inuvik

- The site selected adjacent to the existing reservoir is suitable for the construction of a new reservoir
- The ground conditions for the foundation system on the selected site requires a provision for insulation of the ground, applying a granular pad, board insulation, a ventilating system and a provision for a future thermosyphon
- Process piping associated with the new reservoir will function in balance with the existing reservoir system process and will accommodate the replacement of the water supply line in the near future
- A modular addition to the Valve House will be needed to accommodate a reheat capability of the water system by the two reservoirs
- Electrical and instrumentation improvements are needed in association with the new reservoir
- Construction of foundation system should proceed in May to maintain the integrity of the permafrost in the ground
- Total budget estimate current exceeds the existing available project funding; therefore the tank and foundation segment of the work will be tendered independently to advance an independent portion of the work within the project budget

Respectfully Submitted,

KAVIK-STANTEC INC.

Original signed by

Ken Johnson

Ken Johnson, P.Eng.
Project Manager
Tel: (780) 984 - 9085
Kenneth.Johnson@stantec.com

Original signed by

Michael Maltais, P.Eng.
Senior Project Engineer

Michael. Maltais@stantec.com

APPENDIX A

Geotechnical Report

Geotechnical Evaluation for Proposed Water Reservoir Inuvik, NT

PRESENTED TO

Town of Inuvik

NOVEMBER 2017
ISSUED FOR USE
FILE: NE1041 / YARC03129-01

NEHTRUH – EBA Consulting Ltd.
Box 2244, 201, 4916 - 49 Street
Yellowknife, NT X1A 2P7 CANADA
Tel 867.920.2287 Fax 867.873.3324

This page intentionally left blank.

EXECUTIVE SUMMARY

This report presents the results of a geotechnical investigation conducted by Nehtruh-EBA Consulting Ltd. (Nehtruh-EBA) for the Town of Inuvik, to support the design and construction of a proposed new water reservoir tank at Hidden Lake, just east of the Marine Bypass Road, in Inuvik, NT.

The new water reservoir is proposed to be designed and constructed adjacent to the existing reservoir tank facility at Hidden Lake in Inuvik, NT. The reservoir will be similar to the above-ground reservoir tank in Norman Wells, but with a proposed diameter of 20 m. The existing tank at Inuvik is about 15.5 m in diameter. Based on the photos provided by Stantec, the Norman Wells reservoir is supported on a thermosyphon-stabilized subgrade, while the existing Inuvik reservoir tank was constructed on a ventilated pad.

Two possible sites were proposed for the new reservoir, to the west of the existing reservoir, or to the north. Both sites are presently treed. Two edges of each site are close to existing access roads.

Nehtruh-EBA carried out a desktop review, a detailed air photo review, and mapping of surficial geology and geomorphology to assist in characterizing the project area. Nehtruh-EBA also conducted a site investigation in which six boreholes were drilled. Soil samples were collected from the boreholes for later testing in the laboratory, to characterize the soil conditions. Ground temperature cables were installed in four of the boreholes to help define the permafrost conditions.

Nehtruh-EBA evaluated the feasibility of the project based on the findings from the mapping, the site investigation at the two site options, the laboratory results and the ground temperature measurements, as well as the visual observations from the project site. Nehtruh-EBA considers that the project is feasible with some additional measures to reduce the likelihood of warming or thawing permafrost affecting the reservoir foundation. The findings indicated that either of the proposed sites would be suitable for development when developed in accordance with the recommendations.

In this report, Nehtruh-EBA provides preliminary recommendations for the design and construction of a thermosyphon-stabilized foundation pad beneath the proposed water reservoir tank. Associated recommendations include considerations for site access, site grading and drainage, backfill materials and compaction, construction excavations and dewatering, seismic site class and seismic hazard. Recommendations for further work, and for post-construction monitoring are also provided.

TABLE OF CONTENTS

LIST OF TABLES IN TEXT

APPENDIX SECTIONS

FIGURES

Figure 1	Site Location, Terrain Mapping, and Nearby Boreholes
Figure 2	Site Location and Terrain Mapping
Figure 3	Boreholes and Site Features
Figure 4	Typical Tank Foundation Pad with Thermosyphon Concept

PHOTOGRAPHS

Photo 1	Looking east along gated pumphouse access road; north site is on left hand side.
Photo 2	Looking east from Marine Bypass Road at gated entry to pumphouse and communication site access road.
Photo 3	Looking east along gated tank access road; south site is on left hand side.
Photo 4	Looking west towards Marine Bypass Road along tank access road.
Photo 5	Looking northeast at existing 500,000 gallon tank from east edge of south site at valve house access road.
Photo 6	Looking east from Marine Bypass Road at gated entry to tank access road.
Photo 7	Some surface water from south site may also drain under Marine Bypass Road at utilidor crossing.
Photo 8	Looking southeast at inlet of culvert under Marine Bypass Road, just north of north access road.

APPENDICES

DEFINITIONS

Active layer	The upper layer of soil that thaws and freezes every year. Does not always extend to the permafrost table in discontinuous permafrost. Active layer thickness depends on average air temperature, type of soil (coarse- or fine-grained), thickness of peat at ground surface, slope aspect, vegetation, etc.
Discontinuous permafrost	Permafrost that has unfrozen zones around or in it.
Continuous permafrost	Permafrost that consists of a continuous layer of frozen material, but not precluding the possibility of taliks, which can be present in continuous permafrost.
Excess ice	The amount of ice that is more than the pore volume of the soil when unfrozen. See also ice-rich.
Freezing point depression	The decrease in freezing temperature that results from soils being fine-grained, or having some amount of salinity. The finer-grained the soil and the more saline the soil, the lower the freezing temperature tends to be. That is, a soil at 0°C may not in fact be entirely frozen, and colder soils can still have some unfrozen moisture content.
Frost-stable	Soils that do not settle or heave when subjected to thawing or freezing. Granular soils like sand or gravel are generally frost-stable if they have less than about 10% silt and clay.
Frost-susceptible	Soils that will settle or heave when subjected to thawing or freezing. Silts and clays are highly frost-susceptible. Sands and gravels can be frost-susceptible if they have more than 10% silt and clay.
Ice-rich	Permafrost that is more than 100% saturated and/or has visible ice will lose its strength and settle or flow if it thaws. Fine-grained soils are usually more likely to be ice-rich. Ice-rich soils, even if they stay frozen, can creep and deform under very small loads. See also thaw-sensitive.
Massive ice	Ground ice that appears in the form of thick ice lenses or ice wedges, buried ice (for example, from glaciers or glacier remnants), and pingo ice.
Permafrost	Ground (soil or rock and including ice or organic material) that remains at or below 0°C for at least two consecutive years.
Permafrost table	Top of the permafrost.
Soil porewater salinity	A measurement in parts per thousand (ppt) of salinity in the soil porewater. This value can be used to estimate adfreeze bond strength for piles installed in a frozen soil, as well as the freezing point depression for that soil.
Talik	Layer of unfrozen soil, sometimes between the active layer and the permafrost, and sometimes under or beside a water body (river or lake). Taliks can also include other unfrozen zones between patches or zones of permafrost in discontinuous permafrost.
Thaw-sensitive	Soil, often fine-grained, permafrost that has an ice content high enough that it will lose its strength and settle significantly or even flow if it thaws. Seasonally-frozen materials can also be thaw-sensitive if they have a high enough moisture content See also ice-rich.

LIMITATIONS OF REPORT

This report and its contents are intended for the sole use of the Town of Inuvik and their agents. Nehtruh-EBA Consulting Ltd. (Nehtruh-EBA) does not accept any responsibility for the accuracy of any of the data, the analysis, or the recommendations contained or referenced in the report when the report is used or relied upon by any Party other than the Town of Inuvik and their agents, or for any Project other than the proposed development at the subject site. Any such unauthorized use of this report is at the sole risk of the user. Use of this report is subject to the terms and conditions stated in Nehtruh-EBA's Services Agreement. Nehtruh-EBA's General Conditions are provided in Appendix A of this report.

1.0 INTRODUCTION

1.1 General

This report presents the results of a geotechnical investigation conducted by Nehtruh-EBA Consulting Ltd. (Nehtruh-EBA) for the Town of Inuvik, to support the design and construction of a proposed new water reservoir tank at Hidden Lake, just east of the Marine Bypass Road, in Inuvik, NT.

Authorization to proceed with this work was granted by Mr. Grant Hood, Senior Administrative Officer, of the Town of Inuvik, with a signed Services Agreement executed on June 12, 2017.

Stantec is providing design services to the Town of Inuvik, and is coordinating the provision of project information to Nehtruh-EBA.

1.2 Project Description

The new water reservoir is proposed to be designed and constructed adjacent to the existing reservoir tank facility at Hidden Lake in Inuvik, NT (Figures 1 and 2). The site is located on Block 1355, LTO 224 (GNWT – Lands, 2017). The reservoir will be similar to the above-ground reservoir tank in Norman Wells, but with a proposed diameter of 20 m. The existing tank at Inuvik is about 15.5 m in diameter. Based on the photos provided by Stantec, the Norman Wells reservoir is supported on a thermosyphon-stabilized subgrade, while the existing Inuvik reservoir tank was constructed on a ventilated pad.

The existing Inuvik tank is understood to be insulated and lined. Historically, the water leading to the distribution system and to the water tank has been heated so that winter temperatures in the tank range from about 8 to 10℃. During the summer, when outside temperatures are reliably above 8℃, the tank receives no additional heat (email communications: R. Campbell, G. Hood, K. Johnson, J. Oswell, R. Kors-Olthof; September 28, 2017). It is assumed that the new tank will be the same in that regard. Nehtruh-EBA understands that the Mackenzie River Water Treatment Plant, which came into service in November 2016, presently provides for all potable water needs for the Town of Inuvik. A new Hidden Lake tank is desired so that the Town of Inuvik will also be prepared with a sufficient supply of water for fire protection.

Two possible sites were proposed for the new reservoir tank, to the west of the existing reservoir or to the north, as shown in Figure 3. Both sites are presently treed. Two edges of each site are close to existing access roads (Photos 1 through 8).

1.3 Work Scope and Deliverables

1.3.1 Desktop Review

The scope of work for the desktop study and air photo review was as follows:

- Conduct a review of available information for the site including nearby geotechnical investigation reports, borehole logs, surficial geology maps, geology maps, historical climate records and any other relevant reports, design and/or construction drawings and/or construction quality assurance/control data reports, and performance reports;
- Borrow and review hard copy air photos anticipated to be available from the Government of the Northwest Territories, Lands Department in Yellowknife, NT.

- Obtain and carry out a review of additional aerial photography and/or satellite imagery if/as necessary, and record local surficial geology, permafrost features, thermokarst features and slope features based on the review and the above-mentioned data collected; and
- Prepare summaries of the findings for inclusion in the geotechnical report.

1.3.2 Site Investigation and Reporting

In accordance with Nehtruh-EBA's proposal of May 30, 2017, and subsequent email correspondence of June 7, 2017 (R. Campbell, K. Johnson, R. Kors-Olthof), the scope of work for the site investigation was as follows:

- Conduct a geotechnical site investigation by monitoring the drilling of up to 5 boreholes at each of the proposed water reservoir sites, to depths of 12 to 18 m or refusal, whichever is shallower;
- If/as possible, streamline the site investigation by reducing depths and/or numbers of boreholes if site findings indicated that one of the site options should be preferred over the other,
- Install ground temperature cables in selected boreholes,
- Perform laboratory testing on samples collected during the site investigation for purposes of soil classification and determination of relevant engineering properties; and
- Prepare a geotechnical evaluation report that presents the results of the desktop review items, the site investigation and laboratory testing, and provides recommendations for detailed foundation design based on these findings.

2.0 METHODS

2.1 Desktop Report and Detailed Air Photo Mapping

The available data for the project site was collected and reviewed as outlined in Section 1.3.1 above. Government maps and published articles/reports were acquired and reviewed to summarize the geology of the area.

High-resolution digital air photos were acquired from the National Air Photo Library (NAPL) in Ottawa and hard copy air photos from some years were borrowed from the Government of the Northwest Territories, Lands Department, and were scanned at high resolution. The digital images were sent out for 3D georeferencing (also called Aerial Triangulation or AT). The georeferenced photos were then loaded into PurVIEW for 3D visualization on the computer screen (special glasses are required to view the photos on the screen in 3D).

Using this system, Nehtruh-EBA was able to zoom in to scales as large as 1:1,000 (depending on original photo scale and quality) in order to view permafrost and slope features that might not otherwise be recognizable. Five different air photo years and one satellite image year were reviewed in PurVIEW (Table 1).

The findings from the desktop review and detailed air photo review are presented in Figures 1 and 2, and are discussed below along with the findings from the site investigation in Section 3.0 of the report.

Table 1: Aerial Photography Used for the Desktop Review

Year	Scale	NAPL Roll Number	Photo/Imagery Numbers
1955	1:15,000	A16452	44-46
1972	1:20,000	A22945	174-175
1981	1:20,000	A25937	16-17
1996	1:15,000	A28279	75-76
2011	1:15,000	A31978	79-80
2016	n/a	Satellite Image	

2.2 Site Investigation

2.2.1 Site Access

The Town of Inuvik and Stantec carried out the work to identify the locations of possible buried utilities, such as gas lines, electrical cables or drainage installations, where relevant. It was understood by Nehtruh-EBA that no underground utilities were present, but there were some overhead lines consisting of electrical and telephone cables. The existing utilidors and site facilities were also noted by Nehtruh-EBA. Most of the boreholes did not require relocation, but the location of Borehole 4 at the north site had to be adjusted to maintain the minimum clearance away from the overhead lines.

2.2.2 Site Investigation

Nehtruh-EBA, Stantec and Town of Inuvik representatives coordinated by email to decide on the proposed drilling locations. It was agreed that Nehtruh-EBA's site representative would check in with the Town of Inuvik upon arrival in Inuvik regarding possible further safety procedures and any other matters pertinent to the site investigation.

A Safe Work Form was prepared for the project prior to the investigation.

On August 1, 2017, Mr. John Carnegie, E.I.T., Nehtruh-EBA's field representative, traveled to Inuvik to conduct the geotechnical drilling program. Drilling was carried out on August 1 through 3, 2017.

A Job Site Hazard Assessment was conducted at each drilling location, including assessing the proximity to overhead utilities and adjusting the borehole location if needed.

Nehtruh-EBA conducted the site investigation with a locally-available Watson 2100 drill provided by Tundra Drilling Services Ltd. (Tundra). Tundra had prepared the site access prior to the field work by brushing out the proposed borehole locations. Tundra also used rig mats to achieve access to the borehole locations, with additional work required to access an area of soft ground at the revised location of Borehole 4 on the day of drilling, involving some levelling of the ground surface and placing of crushed gravel. Subsequent to the completion of the drilling, Tundra returned to the site to restore the site surface at the borehole locations to the satisfaction of the Town of Inuvik, and reducing the likelihood of surface water ponding (email correspondence: T.Clarke, G.Pemberton, R.Kors-Olthof, August 21 and 28, 2017).

The Watson 2100 drill was equipped with 30 cm diameter solid stem augers. Six boreholes were drilled to the design depths, with two holes drilled at the "south" site (west of the existing larger water reservoir), and four holes drilled at the "north" site (north of the utilidor). Two boreholes at each site were drilled to depths ranging from 18.0 to

18.3 m below ground surface, while two additional boreholes were drilled at the north site to depths of 12.0 to 12.7 m below ground surface. No difficulties were encountered achieving that depth in most of the boreholes, except in the last 4 m of Borehole 1 at the north site, which was observed to be very difficult drilling, possibly due to meltwater from the upper part of the borehole refreezing in the bottom.

The soil and ground ice conditions encountered were visually logged at the time of drilling. Samples were collected at 1.5 m intervals, or at changes in stratigraphy, as warranted. A photographic log of the site investigation, including photographs of the drill equipment and representative disturbed samples, was taken. Photos from the site investigation are included in the Photographs section at the end of this report (Photos 9 through 22).

Thermistor cables were installed in PVC pipe in all of the deep boreholes to permit the measurement of ground temperatures at each site. A series of five single-bead thermistor cables was installed at each of these locations. Some preliminary readings were obtained at the boreholes subsequent to installation.

The boreholes were backfilled with cuttings, and/or imported clean granular material, and any shortfall was made up with imported granular material upon completion, according to the types of materials encountered in the borehole.

Borehole locations were recorded with a handheld GPS device and measured from local landmarks, if/as applicable. The borehole locations are shown in Figure 3, and the borehole logs are presented in Appendix B.

2.2.3 Laboratory Testing and Determination of Soil Parameters

Samples collected during the field investigation were brought to our geotechnical laboratory in Yellowknife for the purposes of soil classification and determination of relevant engineering properties. Laboratory testing included the determination of natural moisture content, particle size distribution, Atterberg Limits, soluble sulphate content, and porewater salinity testing. Samples for the latter two test types were shipped to our laboratories in Calgary and Edmonton, respectively. Laboratory test results are presented in Appendix C.

2.3 Geotechnical Evaluation and Documentation

Nehtruh-EBA has developed geotechnical recommendations for the detailed design of foundation types including seismic classification and recommended construction procedures, as appropriate. The geotechnical findings and recommendations are presented below in this report, as described in Nehtruh-EBA’s May 30, 2017 proposal.

3.0 SITE DESCRIPTION

3.1 Location

Inuvik is located along the East Channel of the Mackenzie Delta, approximately 100 km from the Arctic Ocean and 1,100 km northwest of Yellowknife. Figures 1 and 2 provide an overview of the project site. Figure 3 provides a larger-scale views of the water reservoir area.

3.2 Climate

Climate data for Inuvik is available from 1958 to the present (Environment Canada 2017). The mean annual air temperature for the period of record is -8.6°C.

The annual air temperature has been gradually increasing. The temperature warming trend was analyzed using linear interpolation of the average annual temperature data between 1958 and 2015. The average rate of increase has been 0.07°C per year over the past 30 years, with the biggest increase occurring in the winter months of

November to February (approximately 0.11°C per year). Over the past 30 years, the mean annual air temperature has averaged -7.6°C.

Over the period of record, the freezing index has decreased by about 20°C-days/year, while the thawing index has increased by about 4°C-days/year, with most of that change occurring since 1970. Environment Canada's published climate normals for 1981 to 2010 at Inuvik indicate an average freezing index of approximately 4330°C days, and an average thawing index of about 1,370°C-days. Over the past 30 years (1986 to 2015), however, the freezing index was about 4,080°C-days and the thawing index about 1,330°C-days. The freezing index decreased by about 23°C-days/year, and the thawing index has increased by about 1°C-days/year over the past 30 years. Therefore, both winters and summers are still becoming warmer, and the changes are even more noticeable in winter than they were before.

According to the Environment Canada climate normals for 1981 to 2010, annual precipitation at Inuvik is about 241 mm, of which 159 cm is snowfall, and 115 mm is rain. Analysis of precipitation data does not indicate a clear trend. It is noted that the variability in annual precipitation is increasing, with some of the highest and lowest values ever recorded in Inuvik occurring in the past 15 years.

3.3 Geological Setting

3.3.1 Physiography

The site is located above the Town of Inuvik and to the northeast of it. The present project site varies in elevation from about 56 to 60 m above mean sea level, which is about 30 m higher than the elevation of the main townsite, and about 55 m higher than the elevation of the East Channel of the Mackenzie River at Inuvik. The topography consists of broad, gentle hills that form part of the rolling uplands of the Interior Plains (Burn and Kokelj 2009). A small, steeper knoll is situated immediately west of Hidden Lake.

3.3.2 Bedrock Geology

Bedrock in the area consists of shale and siltstone of the Lower Cretaceous Horton River Formation (Cecile et al. 2015). To the north, mudstone, conglomerate and sandstone of the Upper Cretaceous Smoking Hills Formation are present (Cecile et al. 2015).

3.3.3 Surficial Geology

The uplands are covered with hummocky or ridged till deposits and lacustrine sediments, both of which are commonly overlain by peat (Cecile et al. 2015). Wind-blown sand may also be present (Burn and Kokelj 2009).

Nehtruh-EBA carried out additional mapping of surficial geology and geomorphology specifically for this project, with findings as described below. Only larger anthropogenic structures such as main roads and buildings are mapped as separate units.

The surficial deposits do not appear to change much over time.

Surficial deposits consist mainly of till more than 1 m thick covering the bedrock that forms the uplands. Thicker till is found near the project area, where it forms undulating terrain (Figure 1). Fluvial deposits flank small creeks. These form a plain northwest of Hidden Lake and thin deposits associated with till and organic deposits south of it and also in the northeast part of the larger map area (Figure 1). Organic deposits are found in poorly-drained low-lying areas. Thin to thick colluvial deposits are found on the sides of the knoll west of Hidden Lake and on a larger slope in the southeastern portion of Figure 1.

Features that change from year to year include landslide scars and permafrost features. As none of the former affect the project area, the various years are not mapped. Permafrost features, however, are mapped according to when they first appear on the air photos (Figures 1 and 2).

Thermal erosion and thermokarst features are common and appear to be caused by human disturbance of the landscape (generally clearing and trail development). Two small thermokarst ponds northeast of Hidden Lake have developed due to permafrost degradation caused by clearing and other activity in this area prior to 1981. A second type of permafrost feature, ice-wedge polygons, are often difficult to identify on the air photos from the various years, but they are generally found in low-lying, wet areas. These are natural features that are not caused by human activity.

Some thermal erosion features were mapped east and southeast of the project area (Figure 2). These appear to have healed by 1996, as shown by the air photos from that and subsequent years, as well as the 2016 satellite image, which is used as the background for Figure 2. The presence of past thermal erosion does show that the area surrounding the inflowing creek is likely ice-rich.

There is evidence of a forest fire having occurred sometime between 1955 and 1972. The area is forested in 1955, but in 1972, a large number of dead trees have fallen over on steeper slopes and landslide activity increases following that air photo year. Increased landslide activity is therefore likely to follow any future burns.

3.4 Surface Conditions

The project site is located in an area of Inuvik that was previously developed for water supply infrastructure. As seen on Figure 2, the “south” site and the south portion of the “north” site are mapped within a previously-disturbed area, although the satellite imagery and site observations also indicate that there are some trees and brush present on both sites.

Inuvik lies about 30 km south of treeline. The regional vegetation is characterized by open-canopy forest of white and black spruce, with stands of birch in dry or disturbed ground. Wet areas are colonized by willows (Burn et al. 2009). According to the Ecological Framework of Canada (2014), vegetation in the Inuvik area is likely to consist primarily of “open, very stunted stands of black spruce and tamarack with secondary quantities of white spruce, and a ground cover of dwarf birch, willow, ericaceous shrubs, cottongrass, lichen, and moss. Poorly drained sites usually support tussocks of sedge, cottongrass, and sphagnum moss. Low shrub tundra, usually dwarf birch and willow, is also common.” Labrador tea and crowberry are also common in Inuvik, and are noted in the “Taiga Plains Ecozone evidence for key findings summary” (ESTR Secretariat 2013). Inuvik is located just along the north edge of the Taiga Plains Ecozone. Taller brush including willow and green alder, and low shrubs such as dwarf birch and willows are expected to be present at and near the site. It is anticipated that low ground covers such as Labrador tea, kinnickkinnick, crowberries and mosses are likely also present, mostly in the less-disturbed areas. Grasses were also observed at the site, especially in disturbed locations.

For the purposes of the following discussion, “Site North” is assumed to be parallel to the Marine Bypass Road, and the utilidor is on an east-west line perpendicular to the Marine Bypass Road.

The “north” site was bounded on the south by the gated pumphouse access road (on the south side of which was the utilidor), on the east by an adjoining access road continuing north to a communications site, and on the north and west by undisturbed ground (Figure 3, Photos 1 and 2, Google Earth 2017). In the immediate vicinity of the north site, a series of poles carrying the electrical power and telephone lines was located along the north edge of the pumphouse access road (causing the location of Borehole 4 to be moved to avoid the overhead lines). To the west of the site, the power line crossed to the south side of the road, alongside the utilidor. To the east of the site, the power line crossed the communications access road, where the main access road bends north, with one set of power poles continuing east to the pumphouse, another set leading south to the filter plant, and another set following the communications access road north, once again crossing the road to the edge of the site (Photos 1 and 2, GNWT – Lands 2017, Stantec 2017).

The “south” site was bounded on the north by the utilidor, on the east by a gravelled access road to the valve house, on the south by the gated tank access road, and on the west by brush and trees, which were also present on the site itself (Photos 3 through 5, Google Earth 2017, GNWT – Lands 2017). On the east side of the valve house access was the existing 500,000 gallon water reservoir tank. The existing filter plant and the old 90,000 gallon water storage tank were further to the east and, beyond that, the existing access bridge and utilidor to the Hidden Lake pumphouse (Figure 3). Power poles were present at approximately the southeast corner of the “south” site, and just east of the existing 500,000 gallon tank (Photo 4). These two poles were not shown on the recent mapping (GNWT – Lands, 2017), but they did not interfere with drill access. The existing site infrastructure is also shown on construction records dated April 6, 1978 (AESL 1978a), and on the Water Tank Area Topographic Survey provided by Stantec (Stantec 2017).

According to the topographic contours on Stantec’s site survey, surface water drainage is approximately from east to west at the “south” site, with elevations ranging from about 58 m at the edge of the road to the valve house, to about 56 m near the west edge of the site. Similar contours on GNWT’s scaled mapping indicates an overall slope gradient of about 6%. This gently-sloped area drains west until the water is blocked at the Marine Bypass Road. The 1978 construction records and Stantec’s survey show a culvert under the tank access road just west of the gate (Photo 6, AESL 1978a, Stantec 2017). Some of the surface water from this area may also drain under the Marine Bypass Road at the utilidor underpass between the two access roads (Photo 7, Google Earth 2017).

The “north” site, which is at a slightly higher elevation than the south site, drains roughly from northeast to southwest, and ranges in elevation from roughly 60 m northeast of the site to 58 m near the southwest edge of the site, with an overall slope gradient of about 5%. The change in slope aspect compared to the south site is due to a gently-sloped hill, the crest of which is at the northeasterly set of communications structures to the north. No culvert is shown under the adjacent access road, but slope contours and Stantec’s site survery indicate that surface water from the site will tend to flow southwest and then west until it reaches a culvert under the Marine Bypass Road, just north of the north access road (Photo 8, Google Earth 2017). Surface water was also observed to pond on the access road in this area. The road has no obvious defined ditches (Photo 1).

3.2 Subsurface Conditions

The following is a general discussion of the subsurface conditions encountered. Borehole logs providing detailed descriptions of the conditions are presented in Appendix B, while laboratory test results are presented on the logs and/or in Appendix C. Representative photographs taken during the investigation are included in the Photographs section of the report (Photos 9 through 22).

PEAT

A layer of peat, ranging from about 0.2 to 0.4 m in thickness, covered the site. The peat contained a trace to occasional gravel particles, and was amorphous to fibrous, moist, and dark brown to black. Roots and rootlets were also present.

CLAY / SILT / SAND / GRAVEL (TILL)

Beneath the peat, till was present. It was primarily classified as clay till, but had enough variation in sand, silt and gravel content that some layers or lenses were classified as silt, sand or gravel.

The clay till is classified as a clay based on behavioural characteristics, though the proportion of silt is higher than the proportion of clay in the soil. The clay till was generally silty, with a trace to some sand, trace gravel, trace oxides, with colour varying from light olive brown to reddish brown to dark grey. Soil moisture content varied greatly, from about 12 to 115%, with an average of 47% at the north site and an average of 45% at the south site (Appendix B). The lowest value of 12% was in Borehole 2 of the south site at a depth of about 14.4 to 14.7 m, just below which the presence of cobbles was noted. The highest moistures measured on the south site were 63, 67, 82 and 115%, while the highest moistures on the north site were 52, 57, 101 and 107%. Photos 15, 16 and 20 show some examples of the clay till.

Atterberg limit tests carried out on four samples indicate the clay varies from medium to high plastic, with plastic limits all in the range of 15 to 17, and liquid limits varying more widely from 43 to 54, with an average of 49. The comparison of the soil moisture content with the liquid limit of the same soil sample is a general indication of whether the soil would tend to flow when thawed. Three of the four tested samples had soil moisture contents that were less than the liquid limit, but well above the plastic limit suggesting that the soils at those depths may not flow, but would have relatively low strength if thawed. One of the tested samples was about 2% higher than the associated liquid limit, indicating it would flow. It was noted that clay layers in the upper 7 m of Borehole 4 of the north site, as well as at about 7 m and 11 m depth in Borehole 2 of the south site also have soil moisture contents over the liquid limit.

The silt till had a sand content varying from sandy to some sand, with some clay and trace gravel. The silt was generally dark grey. Soils moisture content varied greatly, from about 34 to 219%, with an average of 98% at the north site and 151% at the south site (Appendix B). The lowest values of 34 to 42% may be associated with possible transition to or from clay layers, while the very high moisture contents are directly associated with ice lensing and ice inclusions. No Atterberg limit tests were done on the silt; however, typically plastic and liquid limits are much closer in silt materials, and silt tends to flow at lower moisture contents than clay. As well, wet silt is highly susceptible to pumping or liquefaction when disturbed. Photos 17 and 18 show the silt till.

The sand till (or sandy soils interspersed in ice layers), where present, in about the upper 2 to 5 m of Boreholes 1, 3 and 4 of the north site, and both boreholes at the south site, was generally associated with ice lensing, with the lowest soil moisture contents being 41 to 61%, and higher moisture contents ranging from 203 to 369% being more typical (Photos 21 and 22). The silt content varied from trace to some silt to silty, and a trace to some clay was also present. No gravel was specifically noted, but could also be present in this layer. The sand was dark grey in colour.

Gravel till was noted only from about 2.0 to 2.3 m depth in Borehole 1 of the north site (Photo 19). The gravel was sandy, with some silt and some clay, and a soil moisture content of 13%. Due to the natural variability in till soils, this material could also be present elsewhere on the site. Larger material can also be present within any of the above-described till types, including cobbles and boulders.

Additional discussion of the characteristics of the ice in the soil is presented in the next section.

3.1 Permafrost Conditions

3.1.1 General

The Inuvik area lies within the zone of continuous permafrost (90-100% of land contains permafrost), and is also in an area of high ground ice content (>20% by volume) (Burn and Kokelj 2009; Heginbottom et al. 1995). Ground ice in the Inuvik area is typically described as pore-ice, segregated ice, ice wedges, and massive tabular ice (Burn and

Kokelj 2009). Ice found at the base of the active layer is considered likely to be segregated aggradational ice (Nehtruh-EBA 2012). Near-surface delta sediments and upland till deposits are generally ice-rich (Burn and Kokelj 2009).

Permafrost is 60-91 m thick in the Mackenzie Delta approximately 6 km southwest of the study area and 91 m thick approximately 12 km to the southeast (Smith and Lesk-Winfield 2010). It is estimated at 100-500 m thick in the adjacent uplands (Burn and Kokelj 2009). A measurement of 384 m taken about 2 km north of the study area confirms this range (Smith and Lesk-Winfield 2010).

Thermokarst lakes on the delta have been expanding and retrogressive thaw slumps are common at lake edges (Burn and Kokelj 2009). These lakes have also been known to drain catastrophically (Burn and Kokelj 2009).

Nehtruh-EBA’s mapping of permafrost features is presented in Figure 2. Several areas are mapped that indicate patterned ground, thermal erosion and/or thermokarst, but none of these areas were noted in the immediate vicinity of the project site.

3.1.2 Active Layer

The active layer in Inuvik can vary considerably, depending on vegetation, exposure, soil type and moisture content. Nehtruh-EBA anticipates that the active layer could be up to 2.7 to 3.4 m thick, or slightly deeper, based on the findings from the ground temperature readings on September 15, 2017 at Borehole 1 of the south site and Borehole 2 of the north site. At these locations, the active layer thicknesses were estimated by interpolating the ground temperatures measured between 2.0 and 4.0 m depth. Both of these active layer thicknesses were associated with higher soil moisture contents at or just above the estimated active layer depth.

This active layer thickness is generally consistent with the design active layer thickness assumed in recent years in Inuvik, for sites with mainly mineral soils near-surface, despite generally lower ground temperatures than has been typical at lower elevations in Inuvik in recent investigations (Nehtruh-EBA 2017a, 2017b), with the depth of these two values possibly related to reflected energy from the utilidor and exposure due to the proximity of the access road.

The active layer at Borehole 1 of the north site and Borehole 2 of the south site was much thinner. At Borehole 1 of the north site, where the active layer was estimated at less than 1.0 m and possibly as shallow as 0.6 m based on extrapolation of the ground temperature readings, the thinner active layer is attributed to this borehole being located in undisturbed ground. At Borehole 2 of the south site, a similarly thin active layer is likely due to the presence of massive ice below about 1.2 m depth.

3.1.3 Ground Temperatures

Ground temperatures measured at the subject site are presented below in Table 2. Ground temperatures were measured on August 2 and 3, 2017, one to two days after the thermistor cables were installed, in order to confirm that they were functioning correctly. Due to the large borehole diameter, it was anticipated that days to weeks would be required before the temperatures in the backfill around the PVC pipes would equalize to that of the surrounding undisturbed soils. Readings were obtained by Tundra for Nehtruh-EBA on September 15, 2017, about 1.5 months after installation. These readings are late enough in the thaw season that they likely represent a fairly close approximation of conditions at the maximum seasonal depth of thaw, usually early to mid-October in Inuvik.

Table 2: Summary of Measured Ground Temperatures at Proposed Water Reservoir Sites

Depth (m)	Ground Temperature Measured September 15, 2017 (°C)			
	North Site		South Site	
	BH-01	BH-02	BH-01	BH-02
2.0	-0.9	2.2	0.7	-0.7
4.0	-1.8	-0.5	-0.9	-1.1
9.0	-2.2	-1.2	-1.6	-1.3
13.0	-2.1	-1.5	-1.6	-1.9
18.0	-2.2	-2.0	-2.0	-2.0

The current ground temperatures at the water reservoir site averaged about -1.3°C between 4 and 9 m below grade and about -1.8°C between 9 and 18 m below grade. The north site was slightly colder, with an average of -1.4°C between 4 and 9 m below grade and about -1.9°C between 9 and 18 m below grade, while the south site was slightly warmer with average ground temperatures of -1.2°C and -1.7°C in the same depth ranges. This variation in average ground temperatures between the two sites is largely due to the influence of Borehole 1 in the north site. That borehole is the only one of the instrumented boreholes that is located in an undisturbed area, so future development in the area of Borehole 1 (or even the fact that the vegetation was cleared for drill access) will probably eventually result in similar ground temperatures across the whole project area. Accordingly, if the disturbed-site measurements are considered together, the average "disturbed-site" ground temperatures would be about -1.1°C and -1.7°C in same depth ranges.

These temperatures are lower than ground temperatures recently recorded in previously-developed areas in the main townsite of Inuvik at about 26 m elevation at the Inuvik Regional Hospital, and at about 9 m elevation near Twin Lakes (Nehtruh-EBA 2017a, 2017b). Likely the higher elevation and/or greater distance from the moderating effects of the Mackenzie River has some influence on mean annual air temperatures and, therefore, ground temperatures at the project site.

3.1.4 Ground Ice

The till contains high ground ice contents and zones of massive ice with soil inclusions dispersed in an ice matrix. Due to some churning of the samples during extraction with the large auger drill, visible ice contents were difficult to quantify in relation to a precise layer. As noted above in Section 3.2, however, soil moisture contents varied significantly in the till layers (see also Photos 15 through 22).

The medium- to high-plastic clay till had soil moisture contents ranging from about 12 to 115%, with an average of 47% at the north site and an average of 45% at the south site (Photos 15, 16 and 20; Appendix B). The highest moistures measured on the south site were 63, 67, 82 and 115%, while the highest moistures on the north site were 52, 57, 101 and 107%. Based on the Atterberg limit test results that indicated a variation in liquid limit from about 43 to 54, it was noted that clay layers in the upper 7 m of Borehole 4 of the north site, as well as at about 7 m and 11 m depth in Borehole 2 of the south site also have soil moisture contents over the liquid limit. These soils would be expected to be unstable upon thawing, with excess ice contents of up to about 60 to 70%.

The silt till had an even greater variation in soil moisture content, from about 34 to 219%, with an average of 98% at the north site and 151% at the south site (Photos 17 and 18; Appendix B). Though no Atterberg limits are available for the silt till, it is anticipated that excess ice contents could range from about 10 to 190%. Since the very high moisture contents also tended to be associated with ice lensing and ice inclusions, these materials would be expected to be highly unstable upon thawing, including the likelihood of pumping or liquefaction when disturbed.

The sand till (or sandy soils interspersed in ice layers), where present, in about the upper 2 to 5 m of Boreholes 1, 3 and 4 of the north site, and both boreholes at the south site, was also associated with ice lensing, with the lowest soil moisture contents being 41 to 61%, and higher moisture contents ranging from 203 to 369%. All of these layers would be considered thaw-unstable, with excess ice contents likely ranging from 35 to 355% (Photos 21 and 22).

3.2 Soil Porewater Salinity

Soil porewater salinity tests were carried out on four samples from Boreholes 1 and 2 from the north site, at depths ranging from 4.3 to 18.2 m below grade, with soil moisture contents of the samples varying from about 34 to 203%. Measured results ranged from about 1 to 2 parts per thousand (ppt). The salinity results are presented on the borehole logs, in Appendix B. This level of salinity results in a freezing point depression of about 0.1°C, meaning that a soil at -0.1°C is colder than 0°C but may be effectively thawing, or thawed. Fine-grained soils can also result in a freezing-point depression.

Since the salinities measured at the project site are relatively low for Inuvik, it is prudent to also consider the results from elsewhere in Inuvik. Higher salinities would be expected to result in a higher freezing point depression. In the boreholes located 730 to 1160 m to the east of the site along the Three Mile Lake cutline, salinities ranged from about 3 to 6 ppt, while the boreholes 600 m to the northwest at the Female Young Offenders Facility had salinities of 4 to 6 ppt (Nehtruh-EBA 2008, EBA 2000). Salinities ranging from 1 to 27 ppt were observed at the Western Arctic Research Centre (EBA 2010). Lower salinities generally correlated with samples that had higher soil moisture contents (high ice contents), and higher salinities corresponded with samples that had lower soil moisture contents (low ice contents). That site is located on the south side of Mackenzie Road, about 950 m west-southwest of the project site. High salinities were also measured at the Western Arctic Regional Visitor’s Centre, where AGRA reported salinities of up to 15 ppt (AGRA 1998, referencing HBT AGRA 1992). That site is located about 600 m south-southwest of the subject site, on the north side of Mackenzie Road.

4.0 PERFORMANCE OF EXISTING TANK

Nehtruh-EBA was provided with some construction records for the existing water reservoir tank (AESL 1978a, 1978b). Based on the construction records, the fill pad was constructed as follows:

- A base fill of 1118 mm (44 inches) consisting of silty gravel was placed, with the sideslopes at 2H:1V. This material is probably consistent with the pitrun gravel typically seen in Inuvik in the present day, which has a fines content on the order of 25%;
- A 38 mm (1.5 inches) sand cushion was then placed, with a polyethylene vapour barrier placed on top, followed by 75 mm (3 inches) of Styrofoam insulation and another 50 mm (2 inches) of sand;
- A series of 457 mm (18 inch) diameter, 14 gauge, galvanized metal culverts were then placed on the sand at 1067 mm (42 inches) on centre, and backfilled with a total thickness of 560 mm (22 inches) of crushed rock fill, followed by another 75 mm of insulation;
- Finally, a 150 mm (6 inch) thick layer of crushed rock fill was placed, topped by a 50 mm (2 inch) thick layer of fine crushed rock surfacing, which extended down the sideslopes of the fill pad.

The total design fill thickness was thus about 2121 mm (or 2.1 m), according to the construction records. Stantec's topographic survey indicates a difference in elevation on the west, north and east sides of the tank, between the top of the pad and the road surface, of about 1.2 m. However, on the south side of the tank, where drainage culverts led in and out of a low area, the difference varied from 1.8 to 2.1 m. Nehtruh-EBA assumes that the lower part of the tank pad structure was hidden by the adjacent road access structures. The low area is not apparent on the photos, but it may be that the brush and grass is obscuring the topography.

No particle size specifications are shown in the drawings, although the specifications may have had that information. The photos show a large variation in particle sizes of material on the sideslopes of the fill pad, with some of the larger material appearing to be of about 75 mm nominal diameter, and some of it angular enough that it possibly comprises crushed gravel.

No performance records or level surveys were available for review. In general, the existing 500,000 gallon tank appears to have performed reasonably well over the past 39 years. In any event, no major problems have been reported in recent years.

The Town of Inuvik reported that the only performance issue they had had with the tank was that the original tar liner had failed and, therefore, a couple of years ago, the Town had to have the tank drained and holes in the bottom of the tank repaired (email correspondence: R. Campbell, K. Johnson, J. Oswell, R. Kors-Olthof; September 14, 2017).

Stantec also noted that there had been some settlement under the tank a few years ago. At that time, some ice was observed to have developed in the ventilation culverts, but nothing was seen the next year. The following year, some surface water was observed outside the tank. With this second observation of water, Stantec carried out an assessment of the tank and discovered approximately 20 pinholes in the base of the tank where water was slowly leaking out. Beneath these pinholes, some voids were observed. The cause of the voids was not determined, though some possible causes considered at the time were migration of soil (piping) or thaw settlement in the underlying permafrost. The voids were filled with a non-shrink grout. Stantec observed that the tank was not deformed inside, despite the voids under the floor, and so the liner failure was considered to be more likely to be related to its age than to possible movement of the tank (email correspondence: M. Maltais, K. Johnson, R. Kors-Olthof; September 14, 2017.)

Visual observations suggest that there may have been some movement in the granular fill pad and/or the subgrade, although Nehtruh-EBA has not been able to compare "before" and "after" photos of the site, due to the lack of construction record photos. Despite the lack of earlier photos, several observations indicate the likelihood of past movements:

- Irregular elevations and inclinations (or possible bending) of the corrugated ventilation ducts (Photos 23 and 24). The design cover thickness over the culverts would have been about 380 mm (15 inches). The observed cover thickness appeared to vary from about 230 to 460 mm (9 to 18 inches). The observed irregularities could have resulted from the voids reported by Stantec. The ducts are understood to consist of 457 mm (18 inch) diameter corrugated galvanized metal pipes, which presumably were intended to be left open over the winter and capped in the summer. The photos show that some of the caps were on and some were off at the time of the photos (June 13, 2017). It is not known by Nehtruh-EBA whether the caps may have been taken off for inspection purposes at the time of the photos, or if the uncapped pipes during the thaw season are an indication of issues in maintenance operations. However, it is worth noting that one of the main reasons that ventilated pad foundations tend to underperform expectations is due to the pipes not being capped in summer and uncapped in winter.

- Apparent sloughing of the granular fill pad sideslopes (Photos 25 and 26). Although there is a discrepancy in the construction record drawings (a difference of 150 mm or 6 inches in the design radius of the top of the fill), the top of the fill pad should have extended out a minimum of 1.982 m (6.5 feet) beyond the outside face of the tank. The site photos and Stantec's topographic survey suggest that this minimum extension may no longer exist in some areas, especially on the east and west sides of the tank (Stantec 2017). As well, at least a portion of the tank pad sideslopes appear to be steeper than the design 2H:1V gradient. The cause of the sloughing is not known; however, the construction drawings indicate that the lower 1.118 m (44 inches) of the fill pad (base fill) consisted of silty gravel (AESL 1978b). Thus, it is possible that a design gradient of 2H:1V was slightly too steep for long-term stability of the fill slope. Alternatively, thaw settlement in the underlying permafrost could also have allowed the toe to settle, thereby steepening the overall fill slope.

- The construction record drawings do not have any markings to indicate the design outslope gradients on the top of the fill pad. Possibly the specifications might have done so but, if not, the fill top may have originally been essentially flat. Some portions of the fill top still seem relatively flat, while others appear significantly outsloped, likely due to sloughing of the adjacent sideslopes and/or erosion (Photos 23 through 25).

- Differences in gradient of the top of the granular fill pad compared to the horizontal lines on the outside tank wall were noted (Photo 25). It is assumed that the pad and tank base would have been constructed essentially level, aside from any slight outsloping that may have been required for drainage. It is not clear whether the top of the pad is now sloping down more to the south, relative to the tank; or if the tank is now tipping more to the north, relative to the pad. The former scenario seems more likely, if thaw-related movements are assumed to be more likely to occur on the sunny south side of the tank. A similar comparison can be made between the east and west sides of the tank. These apparent differences could also be related to the above-mentioned sloughing, but possible absolute movements can only be confirmed with a level survey (not part of Nehtruh-EBA's scope).

The apparent loss of the fill profile outside the tank could also be related to the voids previously noted by Stantec under the tank. For example, if the leaking water resulted in the piping of fines, thus creating voids under the tank, those same piping routes could have manifested as apparent settled fill or lost fill outside the tank footprint. Nehtruh-EBA anticipates that if sedimentation or sloughed fill material had moved outside the original tank pad footprint, it would likely have been periodically obscured or removed with regular road access maintenance and/or snowplowing.

5.0 RECOMMENDATIONS AND CONSIDERATIONS

5.1 General

The proposed water reservoir tank project is considered feasible at this site, with some additional measures recommended to protect the tank foundation from the potential effects of thawing ice-rich permafrost beneath the site. Although the existing water reservoir tank is understood to have performed adequately over its 39-year life, the ongoing influence of climate change means that the design of any new structure will need to take into account the likelihood of continued warming of the permafrost. Nehtruh-EBA considers that a thermosyphon-stabilized foundation pad is the most appropriate method of providing a tank foundation that will be stable throughout the intended service life, similar to the recently-constructed water reservoir tank at Norman Wells, NT. The findings indicated that either of the proposed sites would be suitable for development when developed in accordance with the recommendations.

The following report sections provide further discussion and recommendations regarding climate change and a thermosyphon-stabilized foundation pad for the proposed reservoir tank. Associated recommendations including site access preparation, site grading and drainage, backfill materials and compaction, construction excavations and dewatering, and site seismic considerations are also included. Finally, recommendations for further work are also provided.

5.2 Climate Change Considerations

The Inuvik area is experiencing rapid climate change. Air temperatures have increased more than 2.5°C since 1970. Near-surface ground temperatures have risen from -3° to -4°C in the 1960s to -1.5° to -3°C in the 2000s (Burn and Kokelj 2009). Nehtruh-EBA's recent measurements in Inuvik are now showing ground temperatures higher than -1°C, with a range of about -0.6°C to -0.3°C at a depth of about 5 m in the main townsite and lowland areas, respectively, and only slightly cooler at -0.6°C at a depth of 11 m in the lowlands (Nehtruh-EBA 2017a, 2017b). The thickness of the active layer has increased in this time frame as well (Burn and Kokelj 2009). It was measured at 0.45 to 0.65 m thick between 1999 and 2008 (Burn and Kokelj 2009) in undisturbed terrain, and up to 3.5 m in disturbed areas.

Permafrost is warm in this area, so much so that even minor changes in plant or snow cover could result in permafrost degradation as climate warms (Burn et al. 2009). Human disturbance of the ground surface could also compound the expected effects of global warming (Burn and Kokelj 2009).

The impacts of potential climate change should be considered in the design of the proposed structure. The Canadian Standards Association (CSA 2010) provides guidance for screening the vulnerability of a development to climate change.

The CSA gives guidance on the potential implications of climate change on ground temperature. Assuming that the current climate trend for Inuvik persists over the assumed 30-year service life, warming of about 2°C can be expected. The current "disturbed-site" ground temperatures at the water reservoir site average at about -1.1°C between 4 and 9 m below grade and about -1.7°C between 9 and 18 m below grade. CSA recommends that in the absence of analysis to the contrary, the ground temperature be assumed to change in step with the air temperature. The measured ground temperature compared to extrapolated temperatures from previously-installed ground temperature cables elsewhere in Inuvik suggests a rate of warming slightly faster than lock-step warming. Nevertheless, the conclusions are the same, regardless of the actual warming rate: the mean annual ground temperature will approach 0°C sometime during the service life of the structure.

A lag can be expected in the air temperature to ground temperature relationship once the ground temperature approaches 0°C, because thawing of ice will delay further warming. But thawing can be expected to commence, and the strength of the ground can be expected to decrease. Even before thawing begins, a warming climate would result in an increase in permafrost creep in ice-rich soils, thereby reducing the bearing resistance of the soils, and potentially also resulting in a thickening of the active layer during the service life.

The sensitivity of the site to climate change is governed by the ice content of the soil and anticipated ground temperature at the end of the service life of the structure. Based on the borehole findings from Nehtruh-EBA, massive ice and/or soils containing excess ice are present, causing the sensitivity of the site to potential climate change to be considered "high" (CSA 2010, Table 7.3). The influence of man-made disturbances also has the potential to affect the sensitivity of the site to potential warming and thaw, likely increasing sensitivity to climate change by creating a mineral soil layer at ground surface that increases the depth of penetration of heat into the ground, or decreasing the thickness of cover over ice-rich layers, thus increasing the likelihood that the top of the ice will be within the active layer. It is further noted, however, that the influence of the relatively warm stored water on the subgrade may far outweigh the influence of climate change.

The consequences of permafrost thaw in thaw-sensitive soils beneath the water reservoir tank are considered "major," and any foundation solutions would require intensive efforts to repair. For example, if permafrost thaw results in the breakage of a thermosyphon system, this will be very expensive to repair, requiring specialized equipment and personnel. If these foundation failures result in the failure of the tank or adjoining utilidor pipe and/or valve house facilities, the consequences would be considered “major” due to the likelihood of a large water spill that could damage the existing infrastructure and cause erosion along the flow paths of the water.

Very often, solutions that are considered “resilient” against climate change are those that will not move or fail if thaw settlement occurs, for example, grouted rock-socketed steel pipe piles (not an option at this site). Therefore, considering the site sensitivity as “high,” combined with an assumed consequences rating of “major” for a thaw-related failure in the foundation system at this site, results in a risk level “A.”

A risk level “A” warrants a full quantitative analysis of the ground thermal regime that will persist below the proposed foundation elements over their useful lifetime. This requirement for analysis would be consistent with the requirements of CSA S500-14, the guide for thermosyphon foundations for buildings in permafrost regions (CSA 2014). This level of analysis has not been undertaken to develop the recommendations presented in this report. If foundation types are selected that require thermosyphons, or rely on the permafrost remaining frozen so as not to fail from thaw settlement, or rely on predicting the magnitude of vertical or lateral creep of foundations in icy soils or massive ice, and so on, additional analysis will be required during foundation design. Also, a systematic performance monitoring program is recommended to identify if corrective action is required at some future time (CSA 2010 Table 7.5).

5.3 Site Preparation for Construction Access

Undeveloped areas of the site are likely to be soft and untrafficable during the thaw season, as was the case at the time of investigation.

In undeveloped areas of the site, site preparation should begin when the soils beneath the peat are still frozen, but when above-freezing temperatures are expected and there is no snow or frost on the ground surface. The trees and brush should be carefully removed so as not to disturb the surface of the peat.

A minimum thickness of 300 mm of frost-stable fill should be placed and compacted in lifts of 150 mm maximum thickness on the peat. If necessary for trafficability, the lift thickness may need to be increased, but then it should be recognized that additional material may be needed to achieve the desired level of compaction for the next stage of construction. As well, consideration should be given to using an excavator, not a bulldozer or loader, to place the material, as the work will likely be easier to carry out without disturbing the peat, and reduce the areas possibly requiring additional work to achieve a trafficable working surface. In the area of the proposed tank, the specifications for the frost-stable fill should meet the requirements for the fill to be placed as part of the thermosyphon-stabilized foundation system, as described below in Section 5.4, and Appendix D.

A geotextile could also be used as a separator between the original ground surface and the fill to be placed, as this will reduce the loss of fill material into the subgrade. The geotextile should have ample resistance against construction stresses as well as puncturing (from cut tree or brush stumps), and be rated for use in stabilization. Nehtruh-EBA can provide additional assistance in choosing a suitable product upon request.

In already-developed areas of the site, work may proceed when the surface soils are thawed. The existing exposed fill soils should be proof-rolled to identify soft areas. Any areas exhibiting excessive deflection during proof-rolling should be removed and replaced with frost-stable fill. The site grade should be restored with frost-stable fill. Alternatively, if excavating the soft spots would expose the peat, or disturb it unnecessarily, it would be preferable to add more fill to bridge the soft area.

5.4 Thermosyphon-Stabilized Foundations

A heated on-grade structure, founded on permafrost, will eventually warm the permafrost subgrade unless measures are taken to prevent warming. Warming of the subgrade would be anticipated even if the water in the reservoir tank were not specifically heated. While the natural temperature of the water is about 5°C in summer (according to a typical raw water analysis from Hidden Lake (Exova 2015)) and likely somewhat cooler in winter, the Town of Inuvik notes that the water entering the tank would range from about 8 to 10°C due to seasonal heating being applied to keep the water temperature above 8°C. This water temperature is much higher than the mean annual air temperature (averaging -7.6°C over the past 30 years). If the permafrost melts, extensive thaw settlement will occur and result in differential settlements between the tank foundation pad, which will affect the serviceability and structural integrity of the tank itself. Consequently, the tank should be constructed on an insulated and cooled granular fill pad designed to preserve the native permafrost subgrade in a sufficiently frozen state, similar to the tank in Norman Wells.

A thermosyphon is a passive heat transfer device that operates by convection through vaporization and condensation. It consists of a sealed vessel with an upper part working as a condenser and a buried part in the ground functioning as an evaporator. Heat transfer is driven by the temperature difference across the unit. For subgrade cooling applications, thermosyphons remove heat from the ground beneath a structure and release it to the outside ambient air, as long as the air is colder than the ground. The design, construction and monitoring of such systems is described in a standard from the Canadian Standards Association (CSA 2014).

Thermosyphons and insulation must be used in conjunction with a pad constructed of frost-stable granular fill beneath the tank.

Generally, three basic parameters govern the design of a shallow foundation on thermosyphons: the thermosyphon heat transfer (extraction) capacity, the insulation thickness, and the thickness of a non-frost-susceptible gravel pad. Nehtruh-EBA is able to undertake the analyses necessary to determine the design configuration for the thermosyphon system. This requires a thermal analysis of the foundation system and is outside the current scope of work. Preliminary recommendations can be provided; however, they must be confirmed by a thermal analysis, as per CSA (2014). The thermistor cables installed at the site at the time of the site investigation will assist in characterizing the ground temperatures at the site. Additional monitoring is desirable in order to obtain a year-round dataset for the site. Ideally, readings would continue for at least one more month at a frequency of one set per week (preferred) or one set per two weeks. If possible, readings thereafter would continue at a frequency of one set per month into the winter.

Determining allowable bearing pressures for a shallow foundation using thermosyphons and insulation also requires a thermal analysis. However, the strength of the insulation is generally the dominant factor and would give an allowable bearing pressure of about 90 kPa assuming HI-40 insulation is used (135 kPa if HI-60 insulation is used; or 220 kPa if HI-100 is used).

Typically, the system would comprise a minimum 300 mm thick cover layer of non-frost-susceptible 20 mm minus sized structural fill, overlying a 150 to 200 mm thickness of rigid extruded polystyrene insulation, protected with a 75 mm thickness of bedding sand above and below the insulation. This cover layer should be compacted in lifts of 150 mm maximum thickness to at least 100% of maximum dry unit weight determined using standard effort (ASTM D698).

Frost-stable fill (typically 20 mm minus or finer with less than 10% fines) is required below the insulation. Nehtruh-EBA's experience is that a non-frost-susceptible fill thickness of at least 1 m is preferable. A reduced fill thickness could be used if a thicker insulation is installed. This thickness would be refined according to the site-specific requirements, however, it is presently assumed that the tank will be located in an area of the site that does not currently have any fill.

The frost-stable fill layer should be constructed as a structural fill and compacted in lifts no more than 200 mm thick, and be compacted to at least 100% of maximum dry unit weight determined using standard effort. The thermosyphon evaporators would be installed in this granular layer. Figure 4 shows a possible general arrangement of this foundation type.

Generally, a minimum slope of 1 percent is recommended from the centre of the pad to facilitate positive drainage beneath the tank. However, finishing of the top surface of the tank pad, including requirements for outsloping or maximum particle size, should be in accordance with the tank manufacturer’s specifications.

If additional fill is required beneath the structural fill for site grading purposes, it may be general engineered fill, which should be compacted to at least 98% of maximum dry unit weight determined using standard effort. The composition of the general engineered fill may be frost-stable pit run gravel or sand, or quarried crushed gravel. Fine-grained soils such as silt or clay, or granular soils with more than 10% fines, should not be used in this application. Nehtruh-EBA can provide further assistance in determining the suitability of proposed fill materials upon request. If the top-size of the pit run or quarried rock fill is larger than 100 mm, there may need to be transition layers between the coarser material and the overlying 20 mm minus structural fill, so that the fill is not lost into the voids of the coarser material. Lift thicknesses should be appropriate to the size of the material, and the maximum particle size gradually decreasing in size as the pad is built up. Depending upon the material size, it may not be practical to specify a minimum compaction, and a procedural specification may be necessary. See Section 5.8 below and Appendix D for further recommendations regarding fill material.

Depending on the particle sizes and angularity of the proposed fill materials, the recommended sideslope angles of the fill pad may vary. In general, the sideslope angles should be no steeper than 4H:1V for the long-term stability of non-frost-susceptible granular materials such as the recommended 20 mm minus structural fill. Coarse, well-graded granular fill, if used beneath the 20 mm minus material, may be stable at angles of 2H:1V to 2.5H:1V. Fill slope materials comprising very coarse, equidimensional, angular particles, such as blast rock carefully placed to interlock, may be stable at steeper angles of 1.5H:1V to 1H:1V. Finer-grained granular material and/or pit run material may require flatter angles for long-term stability. Even flatter angles, to 6H:1V, will reduce the likelihood of snow-drifting, although a larger footprint will be needed. Nehtruh-EBA can provide further advice when the proposed fill configuration and material types are known.

The timing of construction is an important consideration with this foundation concept. The recommended schedule for a foundation over thermosyphons is to construct the pad with thermosyphons and insulation in the late summer or fall of the first year. The pad should (or even must) be left to freeze over the winter with the actual tank construction taking place the following summer. If the pad and tank were to be completed in one summer it would present a risk of settlement as seasonal thaw would continue to penetrate through the summer and then heave as the native ground below the tank refroze during the first winter. Nehtruh-EBA can provide further recommendations on timing of construction which would best fit the development schedule once thermal analyses have been conducted.

The determination of groundwater/active layer flow is important for the thermosyphon design. Thermosyphons can preserve permafrost, but not create it if there is excessive water flow in the subsoils. Based on the site investigation in early August 2017, groundwater seepage is not anticipated to be of significant concern at this site.

Instrumentation and monitoring programs are recommended during construction and over the life of the structure to confirm the performance of the thermosyphon foundation. These programs are further discussed in Section 9.0.

5.5 Pipe Connections

The fine-grained local soil is considered to be highly frost-susceptible, and depending upon the source of granular fill, the local silty gravel fill (as noted on the construction drawings) may be somewhat frost-susceptible. Therefore, some differential movements may be expected between the tank-connected items such as pipes, valves, etc. Piped connections should be designed to accommodate seasonal movements.

5.6 Site Access and Turnaround Areas

It is assumed that some regrading of the surrounding area will be carried out to create or modify access and parking areas around the new tank. Traffic is expected to consist of passenger vehicles, and possibly heavier vehicles, depending on orientation of the site with the existing infrastructure. It is assumed that the access and parking area will be gravel-surfaced.

It is assumed that the site access and turn-around area will already have received general site preparation as described in Section 5.3 above, and likely there will already be approximately a 300 mm thickness of granular structure in place to protect the peat layer. The subbase course should comprise a minimum 500 mm compacted thickness of crushed gravel. The gravel should be placed in three lifts and compacted to at least 100 percent of maximum dry unit weight determined using standard effort. The gravel should have a nominal particle top-size of 75 mm for the recommended lift thickness. It is noted that crushed gravel of this size can be difficult to test with a nuclear densometer, so a procedure specification should be prepared instead. Nehtruh-EBA can assist in preparing a specification upon request.

The base course should comprise a minimum 100 mm compacted thickness of 20 mm minus crushed gravel. The 20 mm minus crush should be compacted to at least 100 percent of Standard Proctor maximum dry density.

The above design recommendations for total granular structure are based on bearing capacity considerations. As the subgrade is considered to be frost-susceptible due to the silt content in the dike fill, there is a potential for frost heave in the area of the offloading facility. If Stantec and the Town of Inuvik prefer that the facility be constructed to also provide frost protection, consideration should be given to the application of high strength insulation at subgrade elevation, or a greater thickness of granular structure. Nehtruh-EBA can provide further recommendations in this regard, if desired.

5.7 Site Grading and Drainage

Final site grading should maintain positive drainage in the direction of natural drainage (generally to the west) and should direct water away from the structures. Fill structures themselves should be outsloped, with new road sections designed with a crown to allow surface water to drain off.

Nehtruh-EBA typically recommends final grades within 3 m of a structure to be at least four percent, sloping away from the structure. It is recommended that site grading beyond this zone should have a minimum grade of 2%. It is noted that the local site gradients in presently undeveloped areas range from about 5 to 6 percent, so the minimum grades should be relatively straightforward to obtain.

5.8 Granular Fill Materials, Compaction and Equipment

Granular fill should be frost-stable (containing a maximum of 10% fines (silt/clay)). It is anticipated that suitable crushed material will be available in Inuvik. Material samples should be obtained and tested to confirm their suitability.

Structural fill should be compacted to 100% of maximum dry unit weight determined using standard effort. Suitability of materials proposed for use as structural fill should be confirmed before use.

Fill for site grading purposes may be general engineered fill, which should be compacted to at least 98% of maximum dry unit weight determined using standard effort. The composition of the general engineered fill may be pit run gravel or sand, or quarried crushed gravel. Fine-grained soils such as silt or clay should not be used in this application. If the top-size of the pit run or quarried rock fill is larger than 100 mm, there may need to be transition layers between the coarser material and the 20 mm minus structural fill. Landscape fill may be composed of silt or clay.

Upon request, Nehtruh-EBA can assist further in choosing and testing materials proposed for various purposes on the site.

Lift thicknesses should not exceed 150 mm, and with thicknesses no greater than 100 mm in locations where lighter compaction equipment is to be used.

For granular pad construction, Nehtruh-EBA recommends using a tamping device such as a standard 1000 lb roller operated by a single worker. For compaction within 600 mm of foundation elements or piping, a small plate tamper should be used.

Compaction using construction equipment such as trucks or dozers is not considered adequate. Compaction of sand and gravel can be most efficiently carried out by using a vibrating drum compactor. Moisture levels in the fill material may have to be adjusted to aid in compaction; it is generally appropriate to add water to granular materials during compaction. Moisture content for good compaction of granular materials is generally recommended to be within +/- 1% of optimum.

Silty or clayey materials should not be used for backfill where seasonal frost heave cannot be tolerated. Furthermore, this material should not be used as fill during the winter because there can be no expectation of reasonable compaction during winter. These materials should be uniformly moisture-conditioned to within +/-2 percent of optimum moisture content. If the material is too wet, it will tend to pump and have poor trafficability, and the required soil density (degree of compaction) may not be achieved. If the material is too dry, the required soil density may be achieved, but the material will be subject to settling when it absorbs water after construction.

5.9 Construction Excavations and Dewatering

Nehtruh-EBA anticipates that little or no excavation will be required at the site to complete the work, and excavations into the native soils are generally not recommended. However, in the event that some of the existing fill materials need to be overexcavated and recompacted or replaced with more suitable materials during site grading, it is anticipated that the site soils can be excavated with an excavator. If work is carried out early in the thaw season, finer-grained soils may be more difficult to excavate due to bonding. However, a ripper tooth will likely be able to excavate most granular soils.

Groundwater was not encountered at the time of the site investigation in early August. However, groundwater is typically encountered on the surface of frozen soils. As well, an excavation may initiate thaw in the permafrost soils. Thaw settlement, soil slumping, and water seepage or flow may result. The time that excavations are left open should be minimized to reduce possible effects to the permafrost regime.

The Workers’ Safety and Compensation Commission (NT and NU) regulations and standard good practice should be followed for all trenches/excavations. Excavations deeper than 1.5 m (i.e. if fill greater than 1 m thickness is encountered) should have sloped sidewalls. A slope of 1 horizontal to 1 vertical (1H:1V) is the steepest recommended slope for temporary excavations in these soils.

Localized seasonal instability (seepage/sloughing/flowing soil) in trench/excavation walls may occur even in slopes that are shorter and/or flatter than these, if soils are encountered that contain excess ice and begin to thaw when exposed. Site-specific mitigations would need to be designed in these cases, under the direction of a qualified geotechnical engineer.

Assuming that the site surface is reasonably dry at the time of construction, surface water flow into excavations should be minimal. However, the contractor should be ready to dewater the excavation if necessary. If seepage is encountered, pumps should be sufficient for drainage of seepage at this site.

Appendix D provides additional information regarding construction excavations.

5.10 Concrete / Cement Type

In the event that some concrete is required on a portion of the project, Nehtruh-EBA recommends that all concrete be designed, mixed, placed and tested in accordance with the most recent edition of the Canadian Standards Association (CSA) standard CAN/CSA-A23.1 and A23.2. According to these standards, concrete should be designed to satisfy at least the minimum durability requirements as defined by exposure class.

Two water-soluble sulphate content tests were carried out on soil samples from the site, with values of 0.04 and 1.36%. These values indicate exposure classes of “negligible” and “severe,” respectively. Nehtruh-EBA therefore recommends that a minimum exposure class of “severe” be assumed for concrete exposed to onsite soils. Therefore, the use of Type HS (sulphate resistant, formerly known as Type 50) Portland cement at a maximum water/cement ratio by mass of 0.45 and a minimum specified 56-day compressive strength of 32 MPa would be recommended. Stricter specifications may be warranted due to structural considerations or durability requirements, or if local soluble sulphate contents indicate an exposure class of “very severe” when tested for this project. Type GU cement may be suitable for at-grade concrete, including a grade-supported floor/foundation, provided that the imported fill has a satisfactory soluble sulphate content. Type GU cement may also be suitable for structural slabs with an air space. Additional provisions for durability should be provided for concrete that may be exposed to de-icing salts, either from direct application, or from being tracked in to the building.

If site soils and/or imported soils, including structural fills, will be in contact with the concrete, these soils should be tested to confirm the requirements for concrete and cement type.

Assuming a maximum coarse aggregate size of 14 to 20 mm, air entrainment of 4 to 7% is recommended for all concrete exposed to freezing temperatures, native soils, and or groundwater.

In addition to the above, CAN/CSA-A23.1 also provides recommendations for cold weather concrete placement. These include protecting freshly-placed concrete from freezing temperatures.

Upon request, Nehtruh-EBA can conduct further testing of soils to be placed in contact with concrete. If cast-in-place concrete is proposed for the project, Nehtruh-EBA can also carry out aggregate suitability testing for material used in concrete production, in conjunction with a concrete mix design.

5.11 Seismic Site Classification and Seismic Hazard

The seismic response of the permafrost and the overlying thermosyphon-stabilized frozen ground over the service life will govern the site classification. The National Building Code of Canada (NBCC 2015) does not explicitly consider permafrost or frozen ground, but it is indirectly addressed through the ranges of shear wave velocity.

Based on available shear wave velocity data for frozen ground, and assuming that the soil beneath the water reservoir tank in the upper 30 m of the soil column is likely to be either competent granular material, or remain frozen over the project service life, the seismic classification is interpreted to be Site Class C, based on Table 4.1.8.4.A in the NBCC (2015).

NBCC (2015) through Natural Resources Canada (2017) also provides interpolated seismic hazard values, with a peak ground acceleration (PGA) of 0.153 g for the Inuvik area, given a 2% probability of exceedance in 50 years. It is noted that this value is significantly higher than the PGA value of 0.061 g from NBCC 2010. Additional spectral acceleration values based on the 2015 model are provided in Appendix F. These values are applicable to Site Class C conditions.

6.0 RECOMMENDATIONS FOR ADDITIONAL WORK

Nehtruh-EBA recommends that the following tasks be carried out to support the proposed work:

- Ground temperature data should continue to be obtained from the thermistors installed during the site investigation, for application in a thermal analysis.
- A thermal analysis should be carried out to support the design of the recommended thermosyphon-stabilized foundation pad. Nehtruh-EBA has the capacity in-house to carry out the thermal analysis, upon request.
- Structural fill to be used around and under the tank should be tested to confirm it is not frost-susceptible in advance of construction.
- If any concrete elements are proposed, fill to be placed against concrete should be tested for water soluble sulphates in order to determine the site-specific concrete durability requirements.
- If cast-in-place concrete is proposed for the project, aggregate suitability testing for material used in concrete production, in conjunction with a concrete mix design, should be conducted.

Nehtruh-EBA can provide more information in this regard upon request.

7.0 DESIGN AND CONSTRUCTION GUIDELINES

Recommended general design and construction guidelines are provided in Appendix D under the following headings:

- Shallow Foundations (1 page)
- Construction Excavations (1 page)
- Backfill Materials and Compaction (3 pages)

These guidelines are generic and are intended to present standards of good practice. They have been developed largely from Nehtruh-EBA's southern practice. We have attempted to address specific local requirements in the main text of this report. The guidelines are supplemental to the main text of this report. In the event of any discrepancy between the main text of this report and Appendix D, the main text should govern. The design and construction guidelines are not intended to represent detailed specifications for the works, although they may prove useful in the preparation of such specifications.

8.0 REVIEW OF DESIGN AND CONSTRUCTION

Nehtruh-EBA should be given the opportunity to review details of the design and specifications related to geotechnical aspects of this project, prior to construction.

All recommendations presented in this report are based on the assumption that an adequate level of monitoring will be provided during construction and that all construction will be carried out by suitably qualified contractors, experienced in earthworks and foundation construction in the north. Adequate levels of construction monitoring are considered to be:

- Observations of the site conditions prior to placing fill;
- For earthworks, particle size analysis on “non-frost-susceptible” or “frost-stable” fill;
- Full-time monitoring and associated density testing during fill placement; and
- For thermosyphon installation, full-time monitoring of installation and associated earthworks.

All such quality assurance monitoring should be carried out by suitably qualified persons on behalf of the owner, independent of the contractor. If the contractor also uses quality assurance for quality control; all parties should be made aware of this. One of the purposes of providing an adequate level of monitoring is to check the recommendations provided in this report. Nehtruh-EBA will provide these services upon request.

9.0 POST-CONSTRUCTION MONITORING PROGRAM

Survey points should be installed at appropriate points on the tank walls, such that absolute elevations can be obtained and monitored throughout the life of the project.

Ground temperature cables are recommended to measure the temperatures of the granular backfill and the frozen subgrade over the life of the structure. At least one horizontal ground temperature cable should be placed immediately adjacent to the horizontal thermosyphon loops, oriented across the length of the loops, to verify that the thermosyphons are operating and performing as designed. At least one vertical cable should also be installed in a drilled probehole to monitor the response of the subgrade to construction. The cable leads can be extended through a conduit or pipe to the edge of the tank for monitoring, protected by a minimum 300 mm thickness of fill soil between the conduit and the tank above. These cables should be heavy-duty multi-bead cables intended for long-term use.

One more ground temperature cable could be considered at a location not affected by the new water reservoir and associated works, as a baseline for the site overall area. It may be practical to install a heavy-duty multi-bead cable in one of the PVC pipes installed during the site investigation.

Temperature measurements should also be taken at the time of construction to confirm the native permafrost and granular fill pad are frozen before the tank base and walls are installed. A qualified engineer should review all ground temperature measurements. After construction, the ground temperature cables should be monitored on at least a semi-annual basis. One set of these readings should be taken during the warmest ground temperature period, which is anticipated to be during early to mid-October. Regular monitoring will permit the permafrost response to be assessed, and remedial activities can be proactively considered, if required.

10.0 CLOSURE

We trust this report meets your present requirements. If you have any questions or comments, please contact the undersigned.

Respectfully submitted,
Nehtruh-EBA Consulting Ltd.

S.J. McCUAIG
LICENSEE
Nov. 3/2017

M.I. KORS-OLTHOF
LICENSEE
Nov 3/17

Prepared by:
Shirley McCuaig, Ph.D., P.Geol.
Senior Terrain Geologist
Engineering Practice
Direct Line: 587.460.3569
Shirley.McCuaig@tetratech.com

Prepared by:
Rita Kors-Olthof, P.Eng., P.E.
Senior Geotechnical Engineer, Arctic Region
Engineering Practice
Direct Line: 403.763.9881
Rita.Kors-Olthof@tetratech.com

KEVIN W. JONES
Nov. 3, 2017
LICENSEE

Reviewed by:
Kevin Jones, P.Eng.
VP Arctic Development
Engineering Practice
Direct Line: 587.460.3533
Kevin.Jones@tetratech.com

PERMIT TO PRACTICE
NEHTRUH-EBA CONSULTING LTD.
Signature
Date Nov. 3, 2017
PERMIT NUMBER: P 465
The Association of Professional Engineers, Geologists and Geophysicists of NWT/NU

/kla

REFERENCES

AGRA Earth and Environmental Limited (AGRA), 1998. Geotechnical Investigation, Inuvik Regional Health and Social Services Centre. Report submitted to Government of the Northwest Territories, Department of Public Works and Services, Inuvik, NT. July, 1998. AGRA File: YX00549.

AMEC Earth & Environmental, a division of AMEC Americas Limited (AMEC), 2009. Geotechnical Consulting Services, Western Arctic Research Centre, Inuvik, NT. Submitted to Government of the Northwest Territories, Department of Public Works and Services, Inuvik, NT. June, 2009. AMEC File: YX00816.

Associated Engineering Services Ltd. (AESL), 1978a. Site Plan, Valve House Location & Overflow Culvert End Section. Storage Tank & Valve House. Drawing No. C051-C1, As-Built. Prepared by AESL for the Town of Inuvik, Northwest Territories. April 6, 1978. AESL File: 3592-C051.

AESL, 1978b. Existing Tank Details. Storage Tank & Valve House. Drawing No. C051-C2, As-Built. Prepared by AESL for the Town of Inuvik, Northwest Territories. April 6, 1978. AESL File: 3592-C051.

Burn, C.R. and Kokelj, S.V., 2009. The environment and permafrost of the Mackenzie Delta area. Permafrost and Periglacial Processes, 20: 83-105.

Canadian Standards Association (CSA), 2014. Thermosyphon foundations for buildings in permafrost regions. CSA Reference Number: S500-14

Canadian Standards Association (CSA), 2010. Technical Guide – Infrastructure in Permafrost. A Guideline for Climate Change Adaptation. CSA Reference Number: Plus 4011-10.

Cecile, M P; Lane, L S; Dyke, L D; Norris, D K., 2015. Geology, Inuvik, Northwest Territories. Geological Survey of Canada, Canadian Geoscience Map 178, (ed. prelim.), 2015. 1 sheet, doi:10.4095/295655.

EBA Engineering Consultants Ltd. (EBA), 2010. Comparison of Soil Porewater Salinities, Western Arctic Research Centre, Inuvik, NT. September 2010. File: Y14101239.001.

EBA, 2001. Geotechnical Evaluation for New Hospital, Inuvik, NT. Report submitted to Ninety North Partners Inc., Yellowknife, NT. May, 2001. EBA File: 0701-01-14936.

EBA, 2000. Geotechnical Evaluation for Female Young Offender Facility, Inuvik, NT. Prepared for the Government of the Northwest Territories, Department of Public Works and Services, Inuvik, NT. August 2000. File: 0701-00-14443.

Environment Canada, 2017. National Climate Data and Information Archive, Climate Normals and Averages. http://climat.meteo.gc.ca/climate_normals/index_e.html; access date: February 2017.

Environment Canada, 2017. National Climate Data and Information Archive, Inuvik, NT. Retrieved from: http://www.climate.weatheroffice.gc.ca/climateData/canada_e.html; access date: February 2017.

ESTR Secretariat, 2013. Taiga Plains Ecozone+ evidence for key findings summary. Canadian Biodiversity: Ecosystem Status and Trends 2010, Evidence for Key Findings Summary Report No. 13. Canadian Councils of Resource Ministers. Ottawa, ON. Vii +109 p. http://www.biodivcanada.ca/default.asp?lang=En&n=137E1147-1

Exova Canada Inc. (Exova), 2015. Analytical Report, Hidden Lake Treatment, Lot ID 1081737, July 14, 2015. Prepared by Exova for the Town of Inuvik. Raw Water Testing Report [July 2015]1081737. Access date: September 17, 2017.

Google Earth, 2017. Imagery for Inuvik, NT. Imagery dated August 17, 2016. Access Dates: various, May through September, 2017.

Government of the Northwest Territories, Lands Department (Lands), 2017. ATLAS GIS imagery, legal, structures, vegetation, transportation, and elevation data, 2011, 2004 and 2003 imagery. https://www.maps.geomatics.gov.nt.ca/HTML5Viewer_Prod/index.html?viewer=ATLAS. Access date: various, May through September, 2017.

Heginbottom, J.A., Dubreuil, M.A., and Harker, P.T., 1995. Canada – Permafrost. In National Atlas of Canada, Natural Resources of Canada, Ottawa, 1995. Map Number: MCR 4177, Scale 1:7,500,000.

Hivon, E.G., 1991. Behaviour of Saline Frozen Soils. Ph.D. Thesis, Department of Civil Engineering, University of Alberta, Edmonton.

Hoeve, Ed., 2012. Climate Change Impact on the State of Permafrost at Inuvik, NWT. GeoManitoba, 2012.

Holubec, I. 2008. Flat Loop Thermosyphon Foundations in Warm Permafrost. Report submitted to the Government of the Northwest Territories and Climate Change Vulnerability Assessment Canadian Council of Professional Engineers, March 2008.

Kiggiak-EBA Consulting Ltd., 2004. Geotechnical Evaluation for New RCMP Detachment, Inuvik, NT. Report submitted to Public Works and Government Services Canada, Yellowknife, Northwest Territories, April 2004. EBA File: 1700106.

National Building Code of Canada, 2015. Volume 1, Division B, Part 4 Structural Design and Appendix C. Published by National Research Council Canada, NRCC 56190. pp. 4-43 to 4-64.

National Building Code of Canada, 2010. User's Guide – NBC Structural Commentaries

Natural Resources Canada (NRC), 2016. 2015 National Building Code Seismic Hazard Calculation. Interactive website at http://www.earthquakescanada.nrcan.gc.ca/hazard-alea/interpolat/index_2015-en.php. Provided by Natural Resources Canada. Access date: February 2017.

Nehtruh-EBA Consulting Ltd. (Nehtruh-EBA), 2017a. Geotechnical Evaluation for Sewage System Upgrades, Inuvik, NT. Report submitted to Stantec, Edmonton, AB. File: NE1038 / YARC03089-01.

Nehtruh-EBA Consulting Ltd. (Nehtruh-EBA), 2017b. Geotechnical Evaluation, New Sewage Lift Station Building, Inuvik Regional Hospital, Inuvik, NT. Report submitted to Williams Engineering Canada Inc., Yellowknife, NT. File: NE1036 / YARC03048-01.002.

Nehtruh-EBA, 2014a. Project Description Report for the Design and Construction of the Proposed Aklavik Bridge - Revision 2. Report submitted to the Hamlet of Aklavik, NT, September 2014. File: Y14101360.007.

Nehtruh-EBA, 2014b. Geotechnical Design of Thermopile Foundation for RCMP Detachment, Inuvik, NT. Report submitted to Public Works and Government Services Canada, Yellowknife, Northwest Territories, March 2014. File: NE1033/ Y14103266-01.

Nehtruh-EBA, 2013. Geotechnical Evaluation for Bridge, West of Aklavik, NT. Report submitted to the Hamlet of Aklavik, NT, March 2013. File: Y14101360.002.

Nehtruh-EBA, 2012. Geotechnical Evaluation for RCMP Detachment, Inuvik, NT. Report submitted to Public Works and Government Services Canada, Yellowknife, Northwest Territories, March 2012. File: NE1029/ Y14101435.

Nehtruh-EBA, 2008. Geotechnical Evaluation for Satellite Earth Station, Inuvik, NT. Prepared for Swedish Space Corporation, Kiruna, Sweden. June 2008. File: Y14101084.

Rampton, V.N., 1987. Surficial Geology, Tuktoyaktuk Coastlands, Northwest Territories. Geological Survey of Canada, Map 1647A, 1987, scale 1:500,000.

Rampton, V.N. 1981. Surficial Geology, Aklavik, District of Mackenzie. Geological Survey of Canada, Preliminary Map 31-1979, 1981. 1 sheet, doi:10.4095/109701.

Rampton, V., 1972. Surficial geology and landforms map of Aklavik. Geological Survey of Canada, Open File 119, 1972. 1 sheet, doi:10.4095/129180.

Stantec, 2017a. Site photographs received on May 23 and June 13, 2017. Photographs taken by Stantec for the Town of Inuvik, NT.

Stantec, 2017b. Water Tank Area Topographic Survey. Prepared by Stantec for the Town of Inuvik, NT.

FIGURES

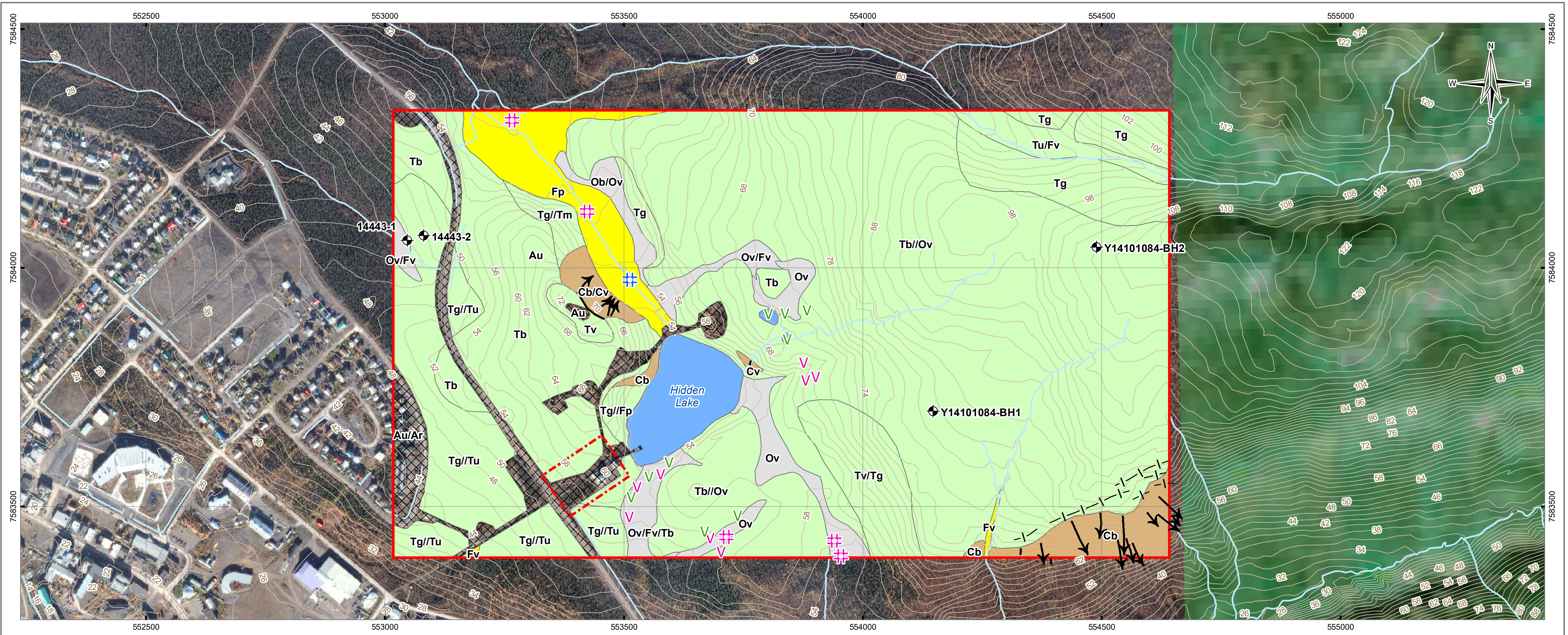

Q:\Vancouver\GIS\ENGINEERING\YARC\YARC03129-01\Maps\YARC03129-01_Figure01_Boreholes.mxd modified 9/19/2017 by stephanie.leusink

LEGEND

- ⬚ Site Location
- ▭ Study Area
- ⊕ Borehole
- –|– Tension Crack
- → Landslide Failure Scar (large)
- — Landslide Head Scarp (large)
- ～ Contour (2 m)
- ～ Watercourse

Permafrost Feature

- V Thermal Erosion Feature
- # Patterned Ground, Undifferentiated Polygons and Circles

Year of Permafrost Feature

- 🟪 1972
- 🟩 1981
- 🟦 1996

SURFICIAL MATERIAL

T	**Till:** very poorly sorted sediment (diamicton) deposited directly by ice by lodgment, melt out, or post-melt out gravity flow; generally matrix- supported and compact. Clasts comprise subangular to very angular pebble, cobble and boulder gravel, with a clay to granule gravel matrix.
C	**Colluvial Deposit:** poorly sorted, commonly poorly compacted mixture of bedrock and/or surficial sediments, deposited by gravity-induced mass movement, including rockfall, rock slide, debris slide, debris flow, creep and slumping.
F	**Fluvial Deposit:** sediment deposited by modern rivers and small streams in channels or as point bar or overbank deposits (synonymous with alluvial).
O	**Organic Deposit:** woody, fibrous peat, present in wetlands (bogs, fens and marshes) and organic mud; underlain by poorly drained sediment or bedrock.
A	**Anthropogenic Material:** human-made or modified geological material whose original properties have been drastically modified; generally flat or terraced.
W	**Water:** waterbodies such as lakes and rivers and open water areas within wetlands.

SURFICIAL EXPRESSION

b	**Blanket:** deposit greater than 1 m thick; minor irregularities of the underlying unit (generally bedrock) are masked but the topographic form is still evident.
v	**Veneer:** deposit less than 1 m thick; minor irregularities of the underlying unit (generally bedrock) are masked but the topographic form is obvious.
p	**Plain:** flat or relatively level landscape element; bedrock topography is masked.
u	**Undulating:** low relief, rolling terrain with no trend or parallelism; bedrock topography is masked.
r	**Ridge:** narrow, elongate and commonly steep-sided feature that rises above surrounding landscape; bedrock topography is masked (unless a bedrock ridge). Includes string bogs (Or).
g	**Gentle slope:** feature forms a slope of 6-26%.
m	**Moderate slope:** feature forms a slope of 27-70%.

DELIMITERS

/	First component more common than second (e.g. Tv/Ov means till veneer covers 60-75% of polygon area, and organic veneer covers the rest).
//	First component much more common than second (e.g. Tbv//Rr means that a combination of till blanket and till veneer cover 80-95% of polygon area, with ridged bedrock covering the rest).

TERRAIN CODE

Fp//Ov

First unit
Delimiter
Second unit

Upper case letter = Surficial Material
Lower case letter = Surficial Expression

NOTES
Base data source: GNWT ATLAS.
Imagery from DigitalGlobe/ESRI.

STATUS
ISSUED FOR REVIEW

GEOTECHNICAL EVALUATION FOR NEW WATER RESERVOIR, INUVIK, NT

Site Location, Terrain Mapping, and Nearby Boreholes

PROJECTION
UTM Zone 8

DATUM
NAD83

CLIENT
TOWN OF INUVIK
Northwest Territories

Scale: 1:8,000
100 50 0 100
Metres

FILE NO.
YARC03129-01_Figure01_Boreholes.mxd

Nehtruh - EBA

OFFICE	DWN	CKD	APVD	REV
Tt-VANC	SL	MEZ	SMC	0

DATE
September 19, 2017

PROJECT NO.
ENG.YARC03129-01

Figure 1

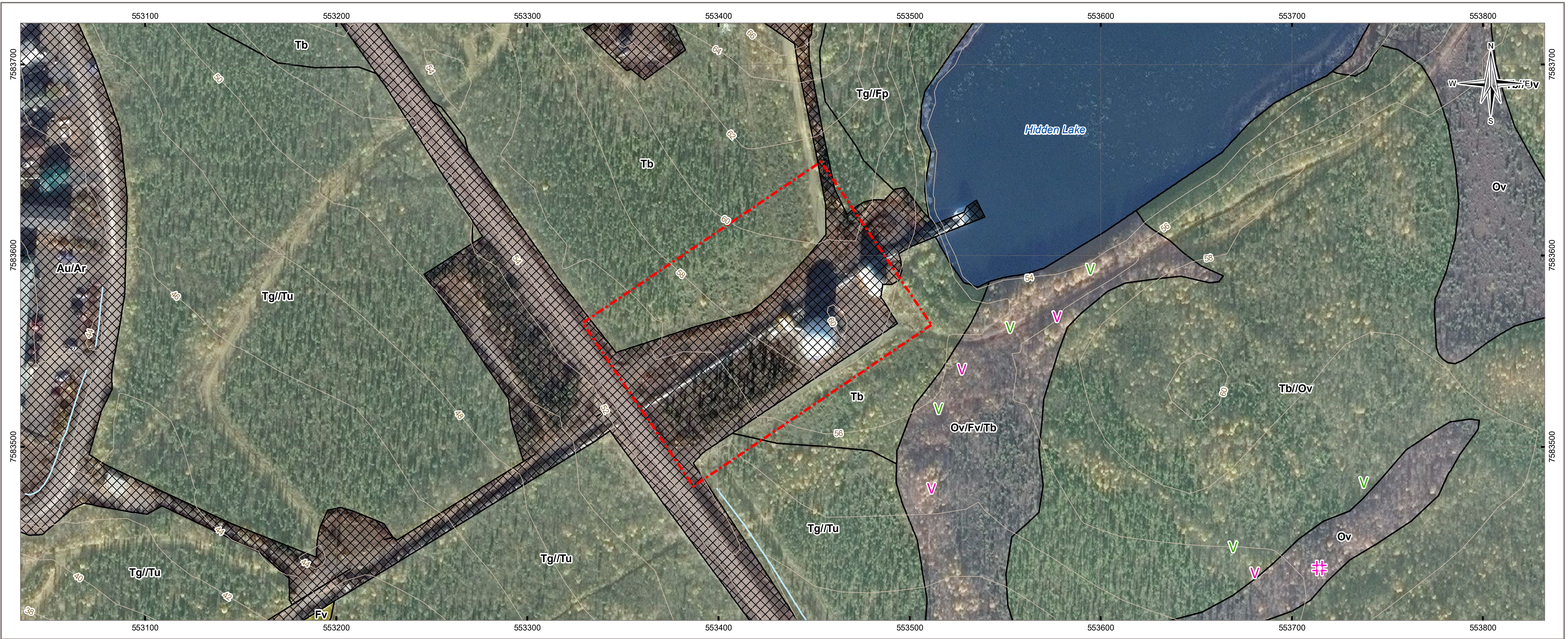

LEGEND

🟥 Site Location

Contour (2 m)

Watercourse

Permafrost Feature

V Thermal Erosion Feature

Patterned Ground, Undifferentiated Polygons and Circles

Year of Permafrost Feature

🟪 1972

🟩 1981

SURFICIAL MATERIAL

T **Till:** very poorly sorted sediment (diamicton) deposited directly by ice by lodgment, melt out, or post-melt out gravity flow; generally matrix- supported and compact. Clasts comprise subangular to very angular pebble, cobble and boulder gravel, with a clay to granule gravel matrix.

F **Fluvial Deposit:** sediment deposited by modern rivers and small streams in channels or as point bar or overbank deposits (synonymous with alluvial).

O **Organic Deposit:** woody, fibrous peat, present in wetlands (bogs, fens and marshes) and organic mud; underlain by poorly drained sediment or bedrock.

A **Anthropogenic Material:** human-made or modified geological material whose original properties have been drastically modified; generally flat or terraced.

W **Water:** waterbodies such as lakes and rivers and open water areas within wetlands.

SURFICIAL EXPRESSION

b **Blanket:** deposit greater than 1 m thick; minor irregularities of the underlying unit (generally bedrock) are masked but the topographic form is still evident.

v **Veneer:** deposit less than 1 m thick; minor irregularities of the underlying unit (generally bedrock) are masked but the topographic form is obvious.

p **Plain:** flat or relatively level landscape element; bedrock topography is masked.

u **Undulating:** low relief, rolling terrain with no trend or parallelism; bedrock topography is masked.

r **Ridge:** narrow, elongate and commonly steep-sided feature that rises above surrounding landscape; bedrock topography is masked (unless a bedrock ridge). Includes string bogs (Or).

g **Gentle slope:** feature forms a slope of 6-26%.

DELIMITERS

/ First component more common than second (e.g. Tv/Ov means till veneer covers 60-75% of polygon area, and organic veneer covers the rest).

// First component much more common than second (e.g. Tbv//Rr means that a combination of till blanket and till veneer cover 80-95% of polygon area, with ridged bedrock covering the rest).

TERRAIN CODE

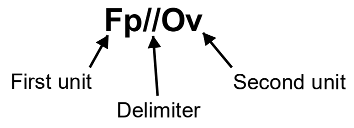

Upper case letter = Surficial Material
Lower case letter = Surficial Expression

NOTES
Base data source: GNWT ATLAS.
Imagery from DigitalGlobe.

STATUS
ISSUED FOR REVIEW

GEOTECHNICAL EVALUATION FOR NEW WATER RESERVOIR, INUVIK, NT

Site Location and Terrain Mapping

PROJECTION	DATUM	CLIENT
UTM Zone 8	NAD83	TOWN OF INUVIK Northwest Territories

Scale: 1:2,000
40 20 0 40
Metres

FILE NO.
YARC03129-01_Figure02_Site.mxd

OFFICE	DWN	CKD	APVD	REV
Tt-VANC	SL	MEZ	SMC	0

DATE	PROJECT NO.
September 19, 2017	ENG.YARC03129-01

Nehtruh - EBA

Figure 2

Q:\Vancouver\GIS\ENGINEERING\YARC\YARC03129-01\Maps\YARC03129-01_Figure02_Site.mxd modified 9/19/2017 by stephanie.leusink

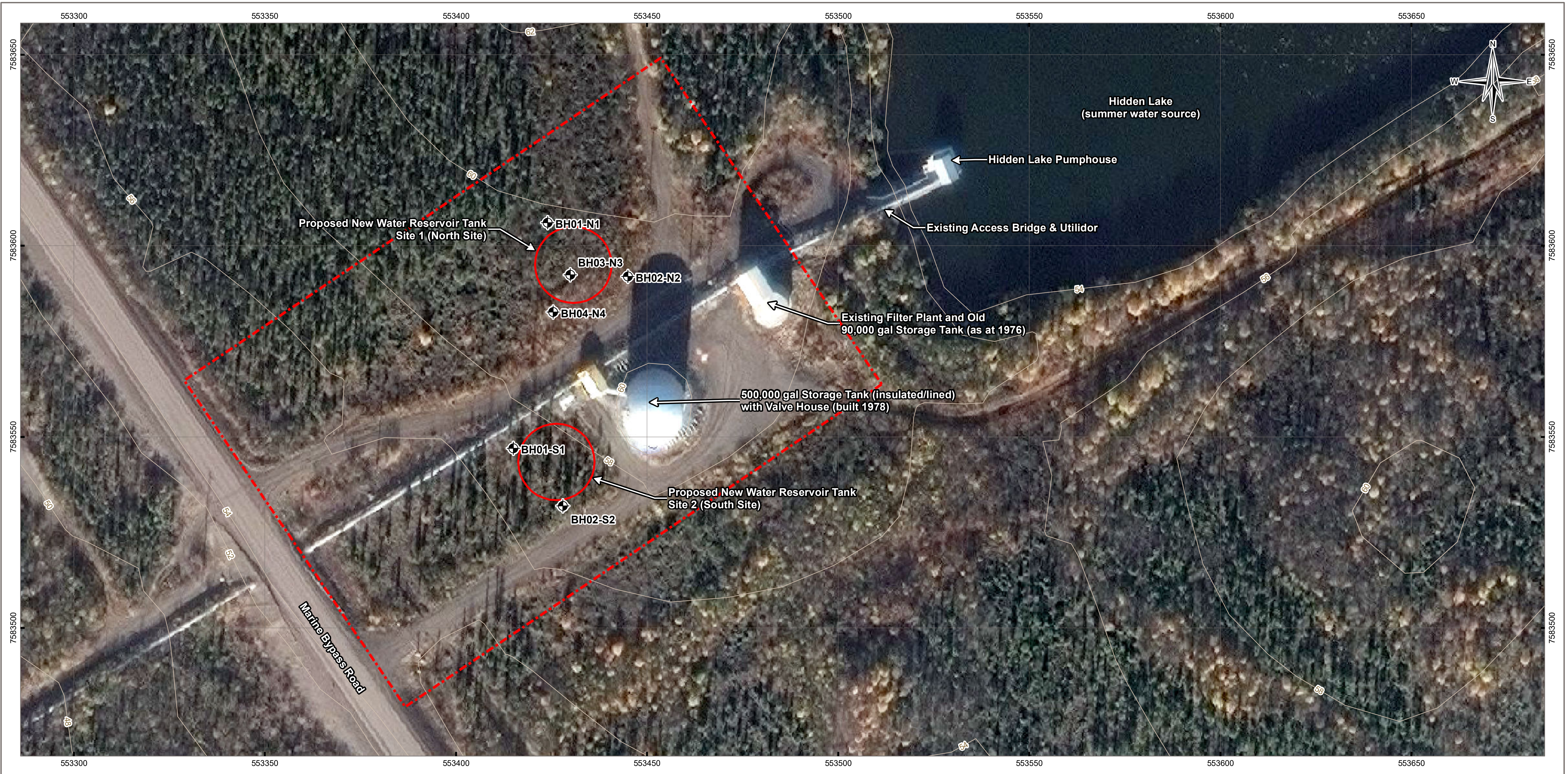

LEGEND

🟥 Site Location

⯐ Borehole

⭕ Proposed New Water Reservoir Tank Site

∼ Contour (2 m)

NOTES
Base data source: GNWT ATLAS.
Imagery from DigitalGlobe.

STATUS
ISSUED FOR REVIEW

GEOTECHNICAL EVALUATION FOR NEW WATER RESERVOIR, INUVIK, NT

Boreholes and Site Features

PROJECTION
UTM Zone 8

DATUM
NAD83

CLIENT
TOWN OF INUVIK
Northwest Territories

Scale: 1:1,000
20 10 0 20
Metres

FILE NO.
YARC03129-01_Figure03_Boreholes.mxd

OFFICE	DWN	CKD	APVD	REV
Tt-VANC	SL	MEZ	RKO	0

DATE
September 19, 2017

PROJECT NO.
ENG.YARC03129-01

Nehtruh - EBA

Figure 3

Q:\Vancouver\GIS\ENGINEERING\YARC\YARC03129-01\Maps\YARC03129-01_Figure03_Boreholes.mxd modified 9/19/2017 by stephanie.leusink

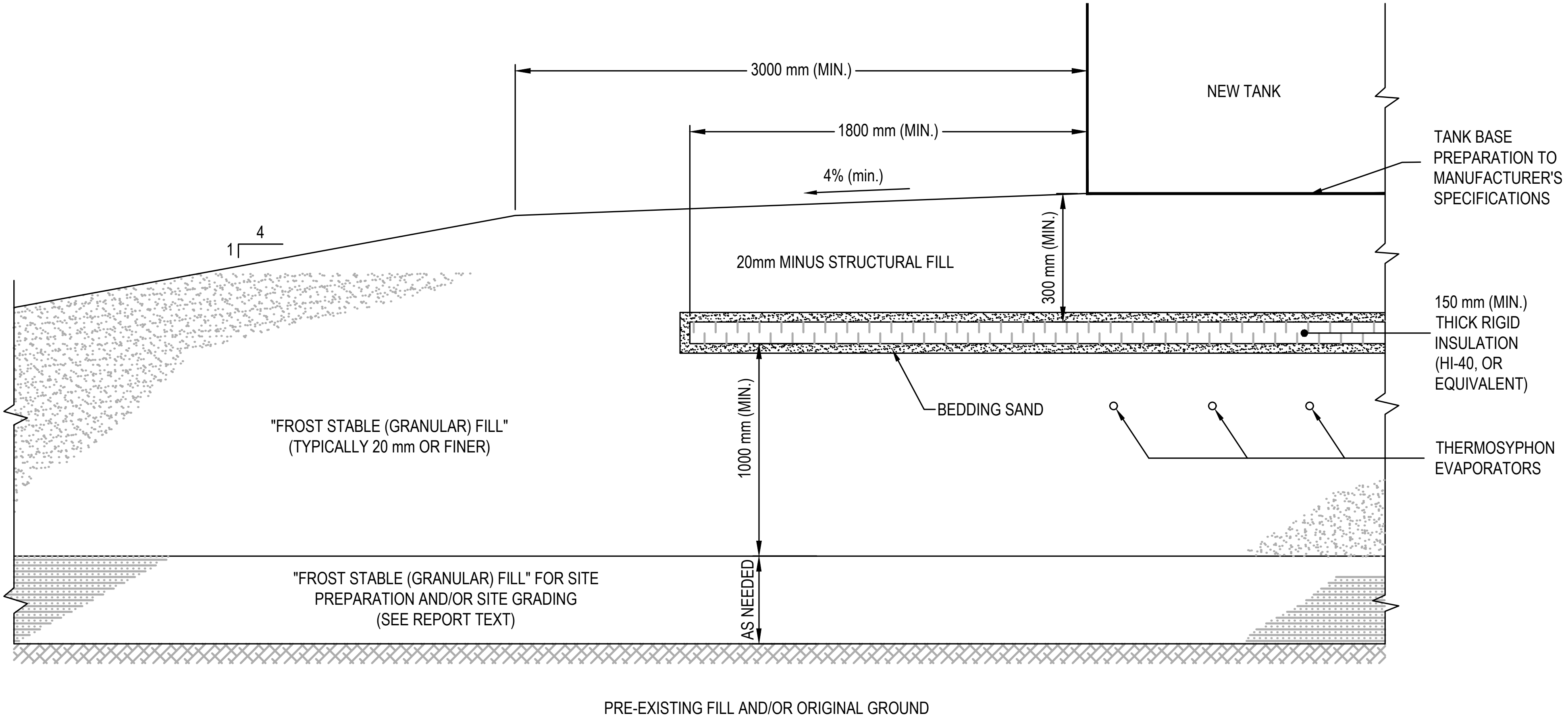

NOTES

- ALL DIMENSIONS LISTED ARE IN MILLIMETRES UNLESS OTHERWISE SPECIFIED
- THIS DRAWING IS NOT TO SCALE

CLIENT

TOWN OF INUVIK
Northwest Territories

Nehtruh - EBA

GEOTECHNICAL EVALUATION
FOR NEW WATER RESERVOIR
HIDDEN LAKE, INUVIK, NT

TYPICAL TANK FOUNDATION PAD WITH
THERMOSYPHONS CONCEPT

PROJECT NO.	DWN	CKD	REV
ENG.YARC03129-01	CB/DBD	RKO	0
OFFICE	DATE		
EDM	September 2017		

Figure 4

PHOTOGRAPHS

Photo 1	Looking east along gated pumphouse access road; north site is on left hand side.
Photo 2	Looking east from Marine Bypass Road at gated entry to pumphouse and communication site access road.
Photo 3	Looking east along gated tank access road; south site is on left hand side.
Photo 4	Looking west towards Marine Bypass Road along tank access road.
Photo 5	Looking northeast at existing 500,000 gallon tank from east edge of south site at valve house access road.
Photo 6	Looking east from Marine Bypass Road at gated entry to tank access road…
Photo 7	Some surface water from south site may also drain under Marine Bypass Road at utilidor crossing.
Photo 8	Looking southeast at inlet of culvert under Marine Bypass Road, just north of north access road.
Photo 9	Drill setting up on rig mats at Borehole 1 at north site.
Photo 10	Looking west at drill setting up at Borehole 2 at north site.
Photo 11	Drilling Borehole 3 at north site, looking south. High ice contents seen from about 1.2 to 3.4 m, with another icy lens at 7.0 m.
Photo 12	Drilling Borehole 4 at north site. Drill is set up on rig mats. Consistently high ice contents between about 1 and 7 m below ground surface.
Photo 13	Borehole 1 at south site was accessed on rig mats. Borehole drilled about 8 m from utilidor.
Photo 14	Setting up drill at Borehole 2 at south site, looking north-northeast towards valve house. Rig mats for Borehole 1 are in middle ground.
Photo 15	Typical silty clay till sample with low ice content, from Borehole 2 on north site, at about 15.8 m depth, with a soil moisture content of about 39%.
Photo 16	Clay till sample with high ice content, from about 4.6 m depth in Borehole 4 of north site.
Photo 17	Typical silt till sample from Borehole 4 of north site below about 12.0 m.
Photo 18	Typical silt till sample with high ice content, from Borehole 2 of north site.

Nehtruh - EBA

Photo 19	Gravel till from about 1.8 m depth in Borehole 1 of north site.
Photo 20	Ice crystals in silty clay till in Borehole 1 of south site, below about 6.4 m below grade.
Photo 21	Drilling through massive ice layer, Borehole 2 at south site, between about 2.3 and 2.8 m depth.
Photo 22	Sample of massive ice lens or layer from Borehole 2 below about 2.3 m. This ice lens has mostly cloudy ice with some clear ice crystals.
Photo 23	Looking north at ventilation pipes in tank pad, valve house in background left and filter plant in background right, with utilidor. Note variation in fill cover and pipe angles.
Photo 24	Looking west at north side of tank pad and ventilation pipes. Valve house in background, utilidor right.
Photo 25	Looking west at sloughing of east side of tank pad. Variation in fill cover and pipe angles also visible.
Photo 26	Looking northeast at sloughing on west side of tank pad, with much more material lost than on sides with pipes extending out.

Photo 1: Looking east along gated pumphouse access road; north site is on left hand side. (Photo credit: Stantec, June 2017)

Photo 2: Looking east from Marine Bypass Road at gated entry to pumphouse and communication site access road. Road to communications site to left is just before filter plant building (furthest building in photo). (Photo credit: Google Earth 2017)

Photo 3: Looking east along gated tank access road; south site is on left hand side. (Photo credit: Stantec, June 2017)

Photo 4: Looking west towards Marine Bypass Road along tank access road. South site is in treed area on right hand side of photo, just beyond power pole at road access to valve house beside existing tank. (Photo credit: Stantec, June 2017)

Photo 5: Looking northeast at existing 500,000 gallon tank from east edge of south site at valve house access road. (Photo credit: Stantec, June 2017)

Photo 6: Looking east from Marine Bypass Road at gated entry to tank access road. Culvert under access road is just west of gate. Overall drainage at south site is west towards Marine Bypass Road, then south through culvert. (Photo credit: Google Earth 2017)

Photo 7: Some surface water from south site may also drain under Marine Bypass Road at utilidor crossing. Looking southeast from entrance to north access road. South access road is in background, right side of photo. (Photo credit: Google Earth 2017)

Photo 8: Looking southeast at inlet of culvert under Marine Bypass Road, just north of north access road (bottom left of photo, at flagged stake). This culvert would eventually drain surface water from north site. (Photo credit: Google Earth 2017)

Photo 9: Drill setting up on rig mats at Borehole 1 at north site (August 2, 2017).

Photo 10: Looking west at drill setting up at Borehole 2 at north site, Mackenzie River in background. Note nearby road and power pole. Borehole 4 was moved north to avoid this power pole (August 3, 2017).

Photo 11: Drilling Borehole 3 at north site, looking south. High ice contents seen from about 1.2 to 3.4 m, with another icy lens at 7.0 m. In background are pumphouse access road, utilidor (mostly obscured by brush), 500,000 gallon tank, and valve house (August 3, 2017).

Photo 12: Drilling Borehole 4 at north site. Drill is set up on rig mats. Consistently high ice contents between about 1 and 7 m below ground surface (August 3, 2017).

Photo 13: Borehole 1 at south site was accessed on rig mats. Borehole drilled about 8 m from utilidor. (August 1, 2017).

Photo 14: Setting up drill at Borehole 2 at south site, looking north-northeast towards valve house. Rig mats for Borehole 1 are in middle ground (August 2, 2017).

Photo 15: Typical silty clay till sample with low ice content, from Borehole 2 on north site, at about 15.8 m depth, with a soil moisture content of about 39%. As well as ice crystals, some larger ice inclusions are present in this layer as seen on lower right, so soil moisture contents can be higher or lower than this result, depending on depth.

Photo 16: Clay till sample with high ice content, from about 4.6 m depth in Borehole 4 of north site. The clay till was silty with traces of sand and oxides, and a soil moisture content of about 101%. Ice appeared to have formed within the nuggetty structure of the till at this depth, in contrast to other depths where larger ice inclusions were noted.

Photo 17: Typical silt till sample from Borehole 4 of north site below about 12.0 m. Though none of the silt had a “low” ice content, Boreholes 1, 2, 3 and 4 at the north site had the lowest ice contents in this material type, at depths of about 17.8, 7.5, 11.8 and 12.5 m, respectively, at soil moisture contents ranging from about 34 to 42%.

Photo 18: Typical silt till sample with high ice content, from Borehole 2 of north site between about 4.8 and 6.5 m below grade. Both ice crystals and stratified ice was noted in this zone, resulting in a soil moisture content of about 168% at a depth of 6.0 m.

Photo 19: Gravel till from about 1.8 m depth in Borehole 1 of north site.

Photo 20: Ice crystals in silty clay till in Borehole 1 of south site, below about 6.4 m below grade.

Photo 21: Drilling through massive ice layer, Borehole 2 at south site, between about 2.3 and 2.8 m depth.

Photo 22: Sample of massive ice lens or layer from Borehole 2 below about 2.3 m. This ice lens has mostly cloudy ice with some clear ice crystals. The lens contains soil inclusions of sand, silt and clay, irregularly distributed in the ice.

Photo 23: Looking north at ventilation pipes in tank pad, valve house in background left and filter plant in background right, with utilidor. Note variation in fill cover and pipe angles. (Photo credit: Stantec 2017)

Photo 24: Looking west at north side of tank pad and ventilation pipes. Valve house in background, utilidor right. (Photo credit: Stantec 2017)

Photo 25: Looking west at sloughing of east side of tank pad. Variation in fill cover and pipe angles also visible. (Photo credit: Stantec 2017)

Photo 26: Looking northeast at sloughing on west side of tank pad, with much more material lost than on sides with pipes extending out. (Photo credit: Stantec 2017)

APPENDIX A

NEHTRUH-EBA'S GENERAL CONDITIONS

GENERAL CONDITIONS

Geotechnical Report

This report incorporates and is subject to these “General Conditions”.

1.0 USE OF REPORT AND OWNERSHIP

This geotechnical report pertains to a specific site, a specific development and a specific scope of work. It is not applicable to any other sites nor should it be relied upon for types of development other than that to which it refers. Any variation from the site or development would necessitate a supplementary geotechnical assessment.

This report and the recommendations contained in it are intended for the sole use of Nehtruh-EBA’s Client. Nehtruh-EBA does not accept any responsibility for the accuracy of any of the data, the analyses or the recommendations contained or referenced in the report when the report is used or relied upon by any party other than Nehtruh-EBA’s Client unless otherwise authorized in writing by Nehtruh-EBA. Any unauthorized use of the report is at the sole risk of the user.

This report is subject to copyright and shall not be reproduced either wholly or in part without the prior, written permission of Nehtruh-EBA. Additional copies of the report, if required, may be obtained upon request.

2.0 ALTERNATE REPORT FORMAT

Where Nehtruh-EBA submits both electronic file and hard copy versions of reports, drawings and other project-related documents and deliverables (collectively termed Nehtruh-EBA’s instruments of professional service), only the signed and/or sealed versions shall be considered final and legally binding. The original signed and/or sealed version archived by Nehtruh-EBA shall be deemed to be the original for the Project.

Both electronic file and hard copy versions of Nehtruh-EBA’s instruments of professional service shall not, under any circumstances, no matter who owns or uses them, be altered by any party except Nehtruh-EBA. Nehtruh-EBA’s instruments of professional service will be used only and exactly as submitted by Nehtruh-EBA.

Electronic files submitted by Nehtruh-EBA have been prepared and submitted using specific software and hardware systems. Nehtruh-EBA makes no representation about the compatibility of these files with the Client’s current or future software and hardware systems.

3.0 ENVIRONMENTAL AND REGULATORY ISSUES

Unless stipulated in the report, Nehtruh-EBA has not been retained to investigate, address or consider and has not investigated, addressed or considered any environmental or regulatory issues associated with development on the subject site.

4.0 NATURE AND EXACTNESS OF SOIL AND ROCK DESCRIPTIONS

Classification and identification of soils and rocks are based upon commonly accepted systems and methods employed in professional geotechnical practice. This report contains descriptions of the systems and methods used. Where deviations from the system or method prevail, they are specifically mentioned.

Classification and identification of geological units are judgmental in nature as to both type and condition. Nehtruh-EBA does not warrant conditions represented herein as exact, but infers accuracy only to the extent that is common in practice.

Where subsurface conditions encountered during development are different from those described in this report, qualified geotechnical personnel should revisit the site and review recommendations in light of the actual conditions encountered.

5.0 LOGS OF TESTHOLES

The testhole logs are a compilation of conditions and classification of soils and rocks as obtained from field observations and laboratory testing of selected samples. Soil and rock zones have been interpreted. Change from one geological zone to the other, indicated on the logs as a distinct line, can be, in fact, transitional. The extent of transition is interpretive. Any circumstance which requires precise definition of soil or rock zone transition elevations may require further investigation and review.

6.0 STRATIGRAPHIC AND GEOLOGICAL INFORMATION

The stratigraphic and geological information indicated on drawings contained in this report are inferred from logs of test holes and/or soil/rock exposures. Stratigraphy is known only at the locations of the test hole or exposure. Actual geology and stratigraphy between test holes and/or exposures may vary from that shown on these drawings. Natural variations in geological conditions are inherent and are a function of the historic environment. Nehtruh-EBA does not represent the conditions illustrated as exact but recognizes that variations will exist. Where knowledge of more precise locations of geological units is necessary, additional investigation and review may be necessary.

7.0 PROTECTION OF EXPOSED GROUND

Excavation and construction operations expose geological materials to climatic elements (freeze/thaw, wet/dry) and/or mechanical disturbance which can cause severe deterioration. Unless otherwise specifically indicated in this report, the walls and floors of excavations must be protected from the elements, particularly moisture, desiccation, frost action and construction traffic.

8.0 SUPPORT OF ADJACENT GROUND AND STRUCTURES

Unless otherwise specifically advised, support of ground and structures adjacent to the anticipated construction and preservation of adjacent ground and structures from the adverse impact of construction activity is required.

9.0 INFLUENCE OF CONSTRUCTION ACTIVITY

There is a direct correlation between construction activity and structural performance of adjacent buildings and other installations. The influence of all anticipated construction activities should be considered by the contractor, owner, architect and prime engineer in consultation with a geotechnical engineer when the final design and construction techniques are known.

10.0 OBSERVATIONS DURING CONSTRUCTION

Because of the nature of geological deposits, the judgmental nature of geotechnical engineering, as well as the potential of adverse circumstances arising from construction activity, observations during site preparation, excavation and construction should be carried out by a geotechnical engineer. These observations may then serve as the basis for confirmation and/or alteration of geotechnical recommendations or design guidelines presented herein.

11.0 DRAINAGE SYSTEMS

Where temporary or permanent drainage systems are installed within or around a structure, the systems which will be installed must protect the structure from loss of ground due to internal erosion and must be designed so as to assure continued performance of the drains. Specific design detail of such systems should be developed or reviewed by the geotechnical engineer. Unless otherwise specified, it is a condition of this report that effective temporary and permanent drainage systems are required and that they must be considered in relation to project purpose and function.

12.0 BEARING CAPACITY

Design bearing capacities, loads and allowable stresses quoted in this report relate to a specific soil or rock type and condition. Construction activity and environmental circumstances can materially change the condition of soil or rock. The elevation at which a soil or rock type occurs is variable. It is a requirement of this report that structural elements be founded in and/or upon geological materials of the type and in the condition assumed. Sufficient observations should be made by qualified geotechnical personnel during construction to assure that the soil and/or rock conditions assumed in this report in fact exist at the site.

13.0 SAMPLES

Nehtruh-EBA will retain all soil and rock samples for 30 days after this report is issued. Further storage or transfer of samples can be made at the Client's expense upon written request, otherwise samples will be discarded.

14.0 INFORMATION PROVIDED TO NEHTRUH-EBA BY OTHERS

During the performance of the work and the preparation of the report, Nehtruh-EBA may rely on information provided by persons other than the Client. While Nehtruh-EBA endeavours to verify the accuracy of such information when instructed to do so by the Client, Nehtruh-EBA accepts no responsibility for the accuracy or the reliability of such information which may affect the report.

APPENDIX B

BOREHOLE LOGS

MODIFIED UNIFIED SOIL CLASSIFICATION

MAJOR DIVISION			GROUP SYMBOL	TYPICAL DESCRIPTION	LABORATORY CLASSIFICATION CRITERIA		
COARSE - GRAINED SOILS More than 50% retained on No. 75 µm sieve*	GRAVELS 50% or more of coarse fraction retained on No. 4 sieve	CLEAN GRAVELS	GW	Well-graded gravels and gravel-sand mixtures, little or no fines	Classification on basis of percentage of fines Less than 5% pass 75 µm sieve GW, GP, SW, SP More than 12% pass 75 µm sieve GM, GC, SM, SC 5% to 12% pass 75 µm sieve Borderline classification requiring use of dual symbols	$C_u = D_{60} / D_{10}$ Greater than 4 $C_c = \frac{(D_{30})^2}{D_{10} \times D_{60}}$ Between 1 and 3	
			GP	Poorly-graded gravels and gravel-sand mixtures, little or no fines		Not meeting both criteria for GW	
		GRAVELS WITH FINES	GM	Silty gravels, gravel-sand-silt mixtures		Atterberg limits plot below 'A' line or plasticity index less than 4	Atterberg limits plotting in hatched area are borderline classifications requiring use of dual symbols
			GC	Clayey gravels, gravel-sand-clay mixtures		Atterberg limits plot above 'A' line and plasticity index greater than 7	
	SANDS More than 50% of coarse fraction passes No. 4 sieve	CLEAN SANDS	SW	Well-graded sands and gravelly sands, little or no fines		$C_u = D_{60} / D_{10}$ Greater than 6 $C_c = \frac{(D_{30})^2}{D_{10} \times D_{60}}$ Between 1 and 3	
			SP	Poorly-graded sands and gravelly sands, little or no fines		Not meeting both criteria for SW	
		SANDS WITH FINES	SM	Silty sands, sand-silt mixtures		Atterberg limits plot above 'A' line and plasticity index less than 4	Atterberg limits plotting in hatched area are borderline classifications requiring use of dual symbols
			SC	Clayey sands, sand-clay mixtures		Atterberg limits plot above 'A' line and plasticity index greater than 7	
FINE-GRAINED SOILS (by behavior) 50% or more passes 75 µm sieve*	SILTS	Liquid limit <50	ML	Inorganic silts, very fine sands, rock flour, silty or clayey fine sands of slight plasticity	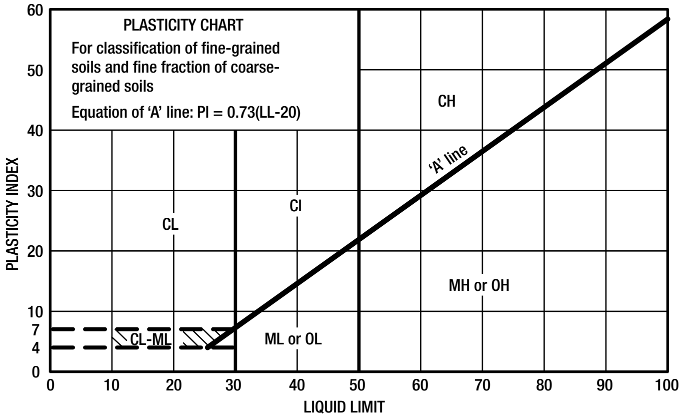		
		Liquid limit >50	MH	Inorganic silts, micaceous or diatomaceous fine sands or silts, elastic silts			
	CLAYS Above "A" line on plasticity chart negligible organic content	Liquid limit <30	CL	Inorganic clays of low plasticity, gravelly clays, sandy clays, silty clays, lean clays			
		Liquid limit 30-50	CI	Inorganic clay of medium plasticity, silty clays			
		Liquid limit >50	CH	Inorganic clay of high plasticity, fat clays			
	ORGANIC SILTS AND CLAYS	Liquid limit <50	OL	Organic silts and organic silty clays of low plasticity			
		Liquid limit >50	OH	Organic clays of medium to high plasticity			
HIGHLY ORGANIC SOILS			PT	Peat, muck and other highly organic soils	* Based on the material passing the 75 mm sieve † ASTM Designation D 2487, for identification procedure see D 2488 USC as modified by PFRA		

GROUND ICE DESCRIPTION

ICE NOT VISIBLE

GROUP SYMBOL	SYMBOL	SUBGROUP DESCRIPTION	
N	Nf	Poorly-bonded or friable	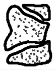
	Nbn	No excess ice, well-bonded	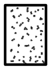
	Nbe	Excess ice, well-bonded	

VISIBLE ICE LESS THAN 50% BY VOLUME

GROUP SYMBOL	SYMBOL	SUBGROUP DESCRIPTION	
V	Vx	Individual ice crystals or inclusions	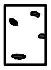
	Vc	Ice coatings on particles	
	Vr	Random or irregularly oriented ice formations	
	Vs	Stratified or distinctly oriented ice formations	

VISIBLE ICE GREATER THAN 50% BY VOLUME

ICE	ICE + Soil Type	Ice with soil inclusions	
	ICE	Ice without soil inclusions (greater than 25 mm thick	

NOTES:

1. Dual symbols are used to indicate borderline or mixed ice classifications.
2. Visual estimates of ice contents indicated on borehole logs ± 5%
3. This system of ground ice description has been modified from NRC Technical Memo 79, Guide to the Field Description of Permafrost for Engineering Purposes.

LEGEND: Soil ☐ Ice ■

TERMS USED ON BOREHOLE LOGS

TERMS DESCRIBING CONSISTENCY OR CONDITION

COARSE GRAINED SOILS (major portion retained on 0.075mm sieve): Includes (1) clean gravels and sands, and (2) silty or clayey gravels and sands. Condition is rated according to relative density, as inferred from laboratory or in situ tests.

DESCRIPTIVE TERM	RELATIVE DENSITY	N (blows per 0.3m)
Very Loose	0 TO 20%	0 to 4
Loose	20 TO 40%	4 to 10
Compact	40 TO 75%	10 to 30
Dense	75 TO 90%	30 to 50
Very Dense	90 TO 100%	greater than 50

The number of blows, N, on a 51mm O.D. split spoon sampler of a 63.5kg weight falling 0.76m, required to drive the sampler a distance of 0.3m from 0.15m to 0.45m.

FINE GRAINED SOILS (major portion passing 0.075mm sieve): Includes (1) inorganic and organic silts and clays, (2) gravelly, sandy, or silty clays, and (3) clayey silts. Consistency is rated according to shearing strength, as estimated from laboratory or in situ tests.

DESCRIPTIVE TERM	UNCONFINED COMPRESSIVE STRENGTH (KPA)
Very Soft	Less than 25
Soft	25 to 50
Firm	50 to 100
Stiff	100 to 200
Very Stiff	200 to 400
Hard	Greater than 400

NOTE: Slickensided and fissured clays may have lower unconfined compressive strengths than shown above, because of planes of weakness or cracks in the soil.

GENERAL DESCRIPTIVE TERMS

Slickensided - having inclined planes of weakness that are slick and glossy in appearance.
Fissured - containing shrinkage cracks, frequently filled with fine sand or silt; usually more or less vertical.
Laminated - composed of thin layers of varying colour and texture.
Interbedded - composed of alternate layers of different soil types.
Calcareous - containing appreciable quantities of calcium carbonate.;
Well graded - having wide range in grain sizes and substantial amounts of intermediate particle sizes.
Poorly graded - predominantly of one grain size, or having a range of sizes with some intermediate size missing.

BOREHOLE KEYSHEET

Water Level Measurement

- ▼ Measured in standpipe, piezometer or well
- ▽ Inferred

Sample Types

- A-Casing
- Core
- Disturbed, Bag, Grab
- HQ Core
- Jar
- Jar and Bag
- NQ Core
- No Recovery
- Split Spoon/SPT
- Tube
- CRREL Core

Backfill Materials

- Asphalt
- Bentonite
- Cement/ Grout
- Drill Cuttings
- Grout
- Gravel
- Sand
- Slough
- Topsoil Backfill

Lithology - Graphical Legend[1]

- Asphalt
- Bedrock
- Cobbles/Boulders
- Clay
- Coal
- Concrete
- Fill
- Gravel
- Limestone
- Mudstone
- Organics
- Peat
- Sand
- Sandstone
- Shale
- Silt
- Siltstone
- Till
- Topsoil

1. The graphical legend is an approximation and for visual representation only. Soil strata may comprise a combination of the basic symbols shown above. Particle sizes are not drawn to scale

TETRA TECH

Town of Inuvik

Borehole No: **BH01**

Project: Inuvik New Water Reservoir	Project No: ENG.YARC03129-01
Location: Site 1, North	
Inuvik, Northwest Territories	UTM: 553424 E; 7583606 N; Z 8

Method: Solid stem auger

Depth (m)	Soil Description	Ground Ice Description	Sample Number	Moisture Content (%)
0				
	PEAT - organic, occasional to trace gravel, amorphous to fibrous, rootlets, moist, dark brown to black, rounded gravel, (300 mm thick)		1	40.3
1	CLAY (TILL) - silty, trace sand, moist, low plastic, trace oxides, (300 mm thick)	Nf		
	SAND (TILL) - some silt and clay, low plastic, coarse sand to 5 mm diameter			
2	GRAVEL (TILL) - sandy, some silt, some clay		2	13.4
	- (Gravel - 50%; Sand - 23%; Fines - 27%)	Ice		
	- (Soluble sulphate content - 1.36%)		3	368.7
3	ICE - some silt and clay, wet, dark grey, fine sand			
	ICE AND SAND (TILL) - trace silt and clay, dark grey, fine sand			
4				
	- (Salinity - 1 ppt)		4	203.3
5	CLAY (TILL) - silty, some sand, trace oxides, moist, low to medium plastic	Vs, ice inclusions		
6			5	44.3
	CLAY (TILL) - silty, some sand, moist, fine sand, stratified	Vs		
7				
			6	52
8	- low to medium plastic			
9				
		Vx, ice inclusions Nbn	7	40.4
	CLAY (TILL) - silty, trace sand, high plastic			
10				
11				
	- (Gravel - 0%; Sand - 4%; Silt - 57%; Clay - 39%)	Nbe	8	56.5
	SILT (TILL) - sandy, some clay, trace gravel, low plastic, dark grey, fine sand			
12				
		Vx	9	112.4
13				
14			10	182.5
	- wet, trace oxides	Nbe		
15				
		Vs, stratified ice throughout	11	110.4
16				
			12	110.2
17				
18	- (Salinity - 1 ppt)		13	33.6
	END OF BOREHOLE (18.20 metres) Thermistor cables installed to 2, 4, 9, 13 and 18 m depths in PVC pipe Active layer thickness estimated between 0.6 and 1.0 m on September 15, 2017			
19				
20				

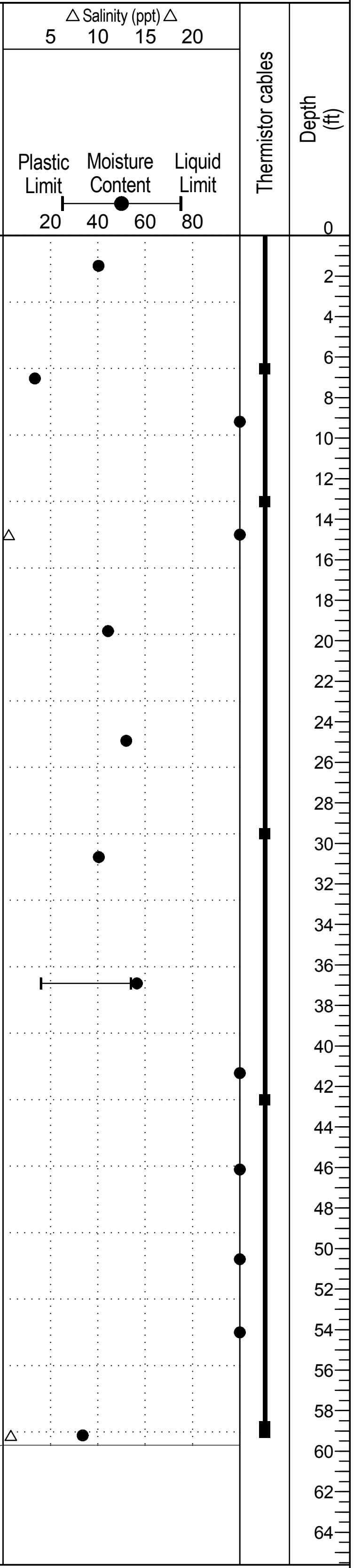

TETRA TECH

Contractor: Tundra Drilling	Completion Depth: 18.2 m
Drilling Rig Type: 2100 Watson	Start Date: 2017 August 2
Logged By: JRC	Completion Date: 2017 August 2
Reviewed By:	Page 1 of 1

Town of Inuvik

Borehole No: **BH02**

Project: Inuvik New Water Reservoir
Project No: ENG.YARC03129-01
Location: Site 1, North
Inuvik, Northwest Territories
UTM: 553445 E; 7583592 N; Z 8

Method	Soil Description	Ground Ice Description	Sample Number	Moisture Content (%)
Solid stem auger	PEAT - organics, occasional to trace gravel, rootlets, amorphous to fibrous, moist, dark brown to black, subrounded gravel, (200 mm thick)			
	CLAY (TILL) - some silt, trace sand, trace gravel, occasional rootlets or roots, high plastic, reddish brown to grey, trace oxides, coarse sand to 5 mm diameter	Vx	1	21
	- (Soluble sulphate content - 0.04%)			
	- silty, moist			
			2	38.7
	- some sand to sandy, trace to some gravel, low plastic, dark grey, subrounded to subangular gravel			
	SILT (TILL) - sandy, some clay, low plastic, dark grey, coarse sand	Vs, ice crystals mixed in Vx	3	35.7
	- some sand, trace gravel, moist	Vx, Vs	4	168.2
	- non to low plastic, fine sand	Ice crystals	5	42
	- (Salinity - 1 ppt)			
	- (Gravel - 4%; Sand - 20%; Fines - 76%)		6	128.8
	CLAY (TILL) - silty, some sand, medium plastic			
	- trace sand, moist, medium to high plastic	Vr	7	45.2
	- wet	Vx, ice inclusions	8	41.7
	- some silt, high plastic	Ice crystals/inclusions	9	40.4
	- silty, moist		10	38.8
	- (Salinity - 2 ppt)		11	37.3
	- some subrounded gravel, medium plastic			
	- (Gravel - 0%; Sand - 13%; Silt - 55%; Clay - 31%)		12	30.3
	END OF BOREHOLE (18.00 metres) Thermistor cables installed to 2, 4, 9, 13 and 18 m depths in PVC pipe Active layer thickness estimated at 3.4 m on September 15, 2017			

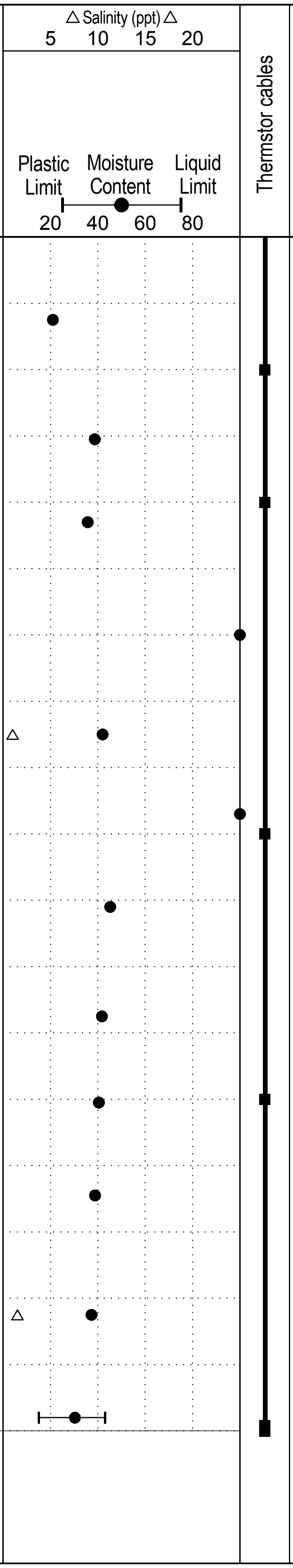

Depth (m): 0 1 2 3 4 5 6 7 8 9 10 11 12 13 14 15 16 17 18 19 20
Depth (ft): 0 2 4 6 8 10 12 14 16 18 20 22 24 26 28 30 32 34 36 38 40 42 44 46 48 50 52 54 56 58 60 62 64

TETRA TECH

Contractor: Tundra Drilling
Completion Depth: 18 m
Drilling Rig Type: 2100 Watson
Start Date: 2017 August 3
Logged By: JRC
Completion Date: 2017 August 3
Reviewed By:
Page 1 of 1

Town of Inuvik

Borehole No: **BH03**

Project: Inuvik New Water Reservoir	Project No: ENG.YARC03129-01
Location: Site 1, North	
Inuvik, Northwest Territories	UTM: 553429.9 E; 7583592.43 N; Z 8

Method	Soil Description	Ground Ice Description	Sample Type	Sample Number	Moisture Content (%)
Solid stem auger	PEAT - organics, occasional to trace gravel, rootlets, amorphous to fibrous, moist, dark brown to black, subrounded gravel, (300 mm thick)				
	CLAY (TILL) - silty, trace sand, occasional rootlets or roots, dark brown to grey		▨	1	36.4
	ICE - some sand, trace silt and clay	Ice	▨	2	352.6
			▨	3	288.7
	SILT (TILL) - sandy, some clay, wet, dark grey, coarse sand	Vx			
	- wet, fine sand	Vx, inclusions	▨	4	55.2
	- trace to some gravel, coarse angular gravel	Vs	▨	5	98.1
	- trace gravel - (Gravel - 1%; Sand - 18%; Fines - 81%)	Vx	▨	6	52.8
	CLAY (TILL) - silty, some sand, medium to high plastic, subangular sand				
	- medium plastic - (Gravel - 0%; Sand - 13%; Silt - 52%; Clay - 35%)		▨	7	40.7
	SILT (TILL) - sandy, some clay, trace to some gravel, low to medium plastic	Vx, inclusions	▨	8	40.4
			▨	9	37.8
	END OF BOREHOLE (12.00 metres)				

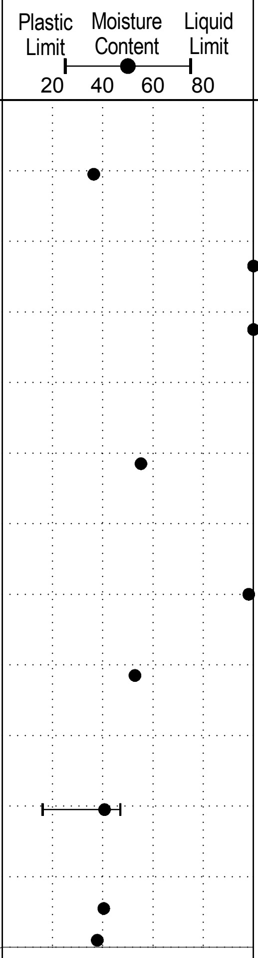

Contractor: Tundra Drilling	Completion Depth: 12 m
Drilling Rig Type: 2100 Watson	Start Date: 2017 August 3
Logged By: JRC	Completion Date: 2017 August 3
Reviewed By:	Page 1 of 1

TETRA TECH

Town of Inuvik

Borehole No: **BH04**

Project: Inuvik New Water Reservoir
Project No: ENG.YARC03129-01
Location: Site 1, North
Inuvik, Northwest Territories
UTM: 553424.56 E; 7583583.19 N; Z 8

Depth (m) | Method | Soil Description | Ground Ice Description | Sample Type | Sample Number | Moisture Content (%) | Depth (ft)

Method: Solid stem auger

Soil Description

PEAT - organics, occasional to trace gravel, rootlets, amorphous to fibrous, moist, dark brown to black, subrounded gravel

SAND (TILL) - some silt and clay, wet, dark grey, ice crystals
- and ICE

CLAY (TILL) - silty, occasional organics, medium to high plastic, trace oxides

SILT (TILL) - sandy, trace clay, dark grey, fine sand

CLAY (TILL) - silty, trace sand, moist, plastic, trace oxides

SILT (TILL) - sandy, some clay, wet, low to medium plastic, dark grey

CLAY (TILL) - silty, some sand, wet, medium to high plastic, ice crystals
- some silt, occasional gravel, high plastic, dark grey, subrounded gravel
- trace sand, wet, medium to high plastic

SILT (TILL) - some sand, trace gravel, trace clay, wet, dark grey, ice crystals, coarse sand, fine gravel
- (Gravel - 4%; Sand - 17%; Fines - 79%)

END OF BOREHOLE (12.70 metres)

Ground Ice Description

Vx, inclusions

Nbe, Vx

Vx

Nbe

Vs, Vx

Vx

Sample Number	Moisture Content (%)
1	330.4
2	107
3	131.1
4	101.3
5	219.1
6	48.6
7	48.5
8	44.3
9	41.2

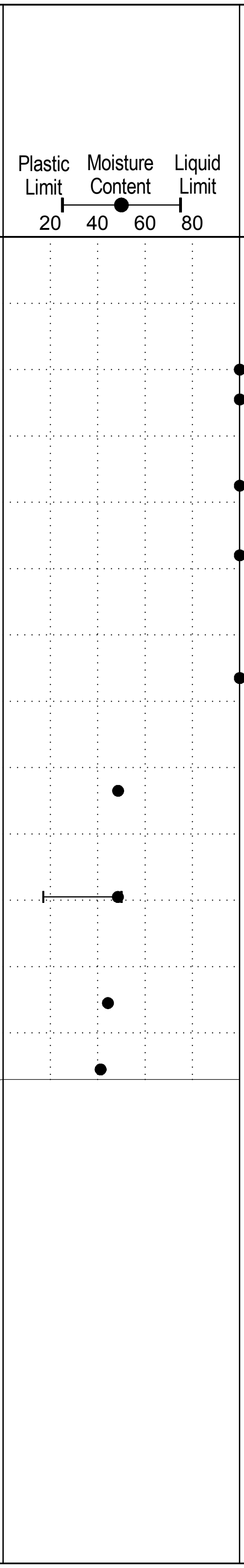

Contractor: Tundra Drilling
Completion Depth: 12.7 m
Drilling Rig Type: 2100 Watson
Start Date: 2017 August 3
Logged By: JRC
Completion Date: 2017 August 3
Reviewed By:
Page 1 of 1

TETRA TECH

Town of Inuvik

Borehole No: **BH01**

Project: Inuvik New Water Reservoir	Project No: ENG.YARC03129-01
Location: Site 2, South	
Inuvik, Northwest Territories	UTM: 553415 E; 7583547 N; Z 8

Depth (m)	Method	Soil Description	Ground Ice Description	Sample Type	Sample Number	Moisture Content (%)	Depth (ft)
0	Solid stem auger						0
		PEAT - organics, occasional to trace gravel, rootlets, amorphous to fibrous, moist, dark brown to black, subrounded gravel, (200 mm thick)					
							2
1		SAND (TILL) AND SILT (TILL) - trace clay, moist, dark grey	Vs				
		- ice lenses					4
				▨	1	60.6	
							6
2		CLAY (TILL) - some sand, moist, dark grey					
				▨	2	67.2	
			Ice				8
		ICE AND CLAY (TILL) - silty, sandy, trace organics, reddish brown					
				▨	3	81.6	
3							10
		ICE AND SAND (TILL) - some silt and clay, fine sand					
							12
4							
							14
				▨	4	61.1	16
5			Vs				
		SILT (TILL) - some gravel, some sand, trace clay, moist, dark grey					
							18
6							20
		- (Gravel - 17%; Sand - 13%; Fines - 70%)		▨	5	133.4	
			Ice inclusions				
		CLAY (TILL) - silty, some sand, low plastic, dark grey					22
7							
							24
				▨	6	45.5	
			Vx				
		- trace sand, low to medium plastic					26
8							
							28
9							30
				▨	7	36.3	
		- some silt, moist, medium plastic, some reddish brown					32
10							
							34
11							36
				▨	8	39.9	
		- high plastic					38
12							
							40
				▨	9	38.3	42
13			Vx, inclusions				
							44
14							46
				▨	10	34.7	48
15		- medium to high plastic					
							50
				▨	11	35.3	52
16		- dark grey	Vs, inclusions				
							54
17							56
				▨	12	29.7	
							58
18		- (Gravel - 0%; Sand - 16%; Silt - 52%; Clay - 33%)		▨	13	32.2	60
		END OF BOREHOLE (18.30 metres) Thermistor cables installed to 2, 4, 9, 13 and 18 m depths in PVC pipe Active layer thickness estimated at 2.7 m on September 15, 2017					
							62
19							
							64
20							

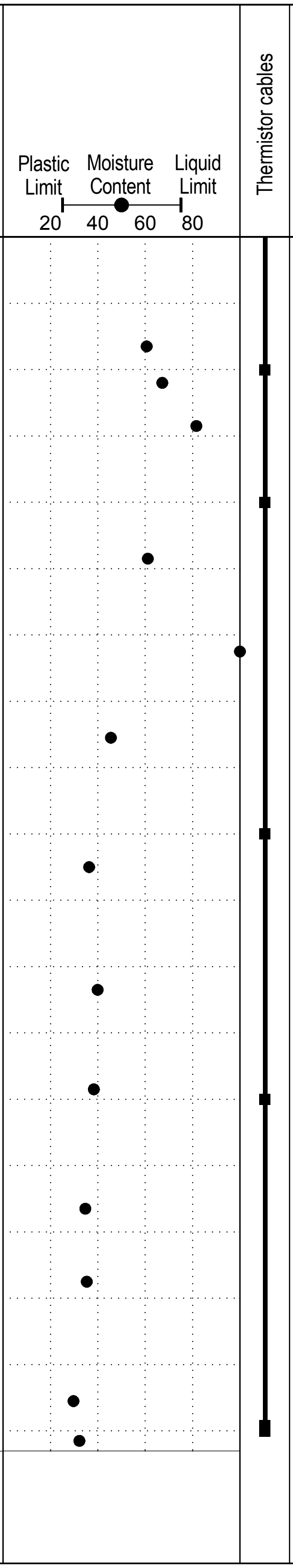

TETRA TECH

Contractor: Tundra Drilling	Completion Depth: 18.3 m
Drilling Rig Type: 2100 Watson	Start Date: 2017 August 1
Logged By: JRC	Completion Date: 2017 August 1
Reviewed By:	Page 1 of 1

Town of Inuvik

Borehole No: **BH02**

Project: Inuvik New Water Reservoir

Project No: ENG.YARC03129-01

Location: Site 2, South

Inuvik, Northwest Territories

UTM: 553428 E; 7583532 N; Z 8

Method: Solid stem auger

Soil Description	Ground Ice Description	Sample Number	Moisture Content (%)
PEAT - organics, occasional to trace gravel, rootlets, amorphous to fibrous, moist, dark brown to black, subrounded gravel			
SAND (TILL) - silty, trace clay, moist, coarse sand	Vr Vs, Vx	1	40.5
ICE AND SAND (TILL) - some silt and clay, moist, coarse sand		2	203.6
- reddish brown clay	Nbe	3	512.8
SILT (TILL) - sandy, some clay, trace gravel, coarse sand to 5 mm diameter	Vx, ice lenses Vr, Vx		
- dark grey, fine sand	Vx, small individual ice crystals	4	101.7
SILT (TILL) AND ICE - sandy, some clay	Nbe, Vx Few ice crystals throughout	5	217
CLAY (TILL) - silty, trace sand, wet, medium to high plastic	Ice inclusions	6	115
- some silt, high plastic	Nbn, Vx, few ice crystals	7	48.3
- trace oxides		8	38.3
- trace silt, dark grey	Nbe, ice inclusions	9	62.8
- moist	Vx, few ice crystals	10	29.1
- occasional large reddish cobbles	Ice inclusions	11	11.9
- sandy, trace gravel - (Gravel - 4%; Sand - 23%; Fines - 73%)	Vx, few ice crystals	12	32.7
		13	39.7
END OF BOREHOLE (18.00 metres) Thermistor cables installed to 2, 4, 9, 13 and 18 m depths in PVC pipe			

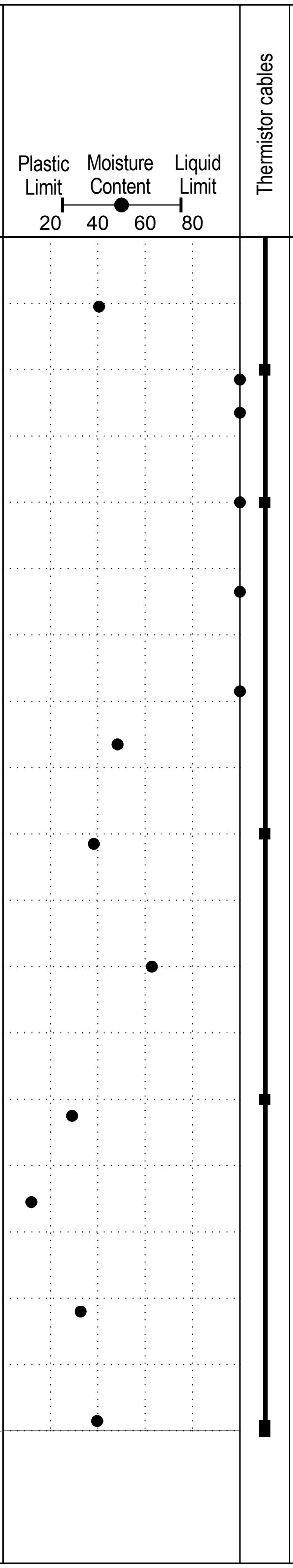

TETRA TECH

Contractor: Tundra Drilling

Completion Depth: 18 m

Drilling Rig Type: 2100 Watson

Start Date: 2017 August 2

Logged By: JRC

Completion Date: 2017 August 2

Reviewed By:

Page 1 of 1

APPENDIX C

LABORATORY TEST RESULTS

PARTICLE SIZE ANALYSIS REPORT

ASTM D422, C136 & C117

Project:	Inuvik Water Reservoir	Sample No.:	6543
Project No.:	YARC03129-01	Material Type:	
Site:	North Site	Sample Loc.:	BH01 N1
Client:	City of Inuvik	Sample Depth:	11.1 - 11.4 m
Client Rep.:	R. Campbell, Director of Public Services	Sampling Method:	grab sample from auger
Date Tested:	August 24, 2017 By: JPC	Date sampled:	August 2, 2017
Soil Description[2]:	CLAY, silty, trace sand	Sampled By:	JRC
		USC Classification:	CH Cu: #N/A
Moisture Content:	56.5%		Cc: #N/A

Particle Size (mm)	Percent Passing
75	
50	
40	
25	100
20	100
12.5	100
10	100
5	100
2	100
0.85	99
0.425	99
0.25	98
0.15	97
0.075	95.6
0.0264	77.3
0.0172	72.4
0.0103	65.9
0.0074	61.8
0.0054	56.1
0.0028	44.7
0.0012	32.5

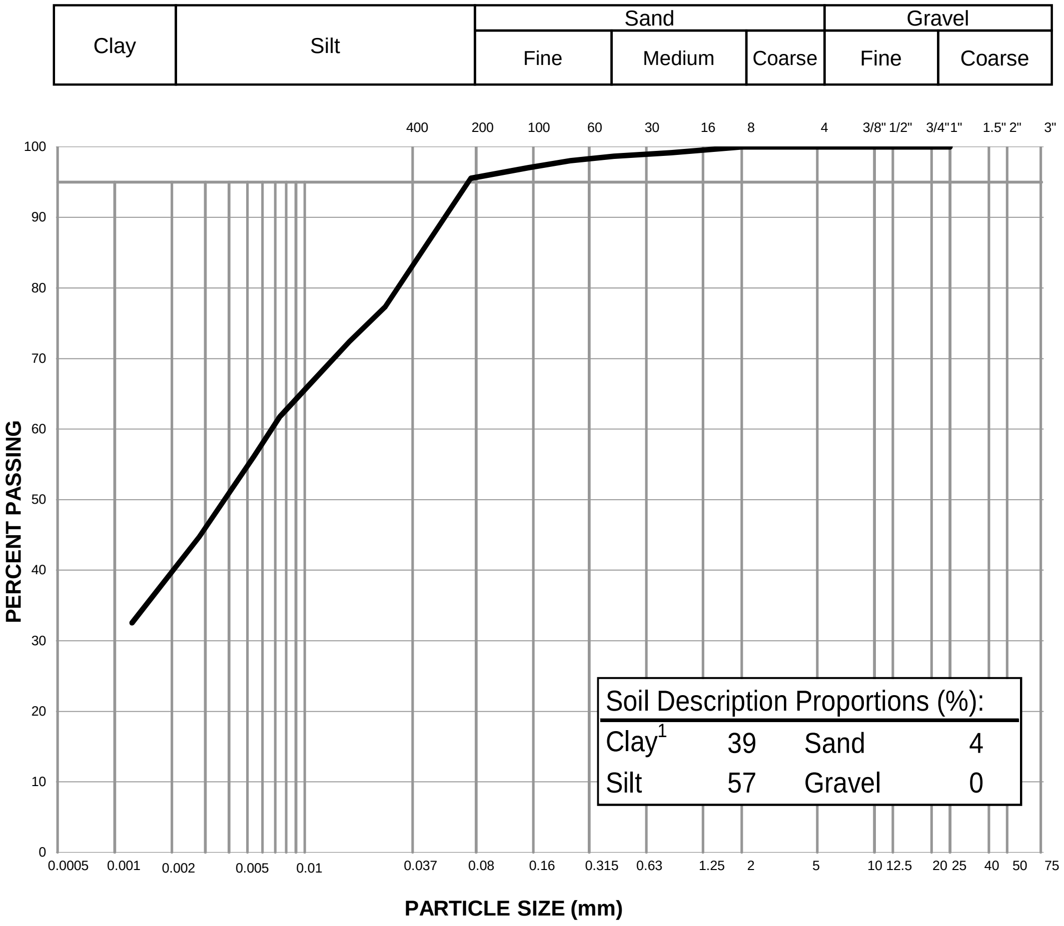

Soil Description Proportions (%):			
Clay[1]	39	Sand	4
Silt	57	Gravel	0

Notes: [1] The upper clay size of 2 um, per the Canadian Foundation Engineering Manual

[2] The description is visually based & subject to Tetra Tech description protocols

Specification: ______

Remarks: ______

Reviewed By: RKO P.Eng.

TETRA TECH

PARTICLE SIZE ANALYSIS REPORT

ASTM D422, C136 & C117

Project: Inuvik Water Reservoir
Project No.: YARC03129-01
Site: South Site
Client: City of Inuvik
Client Rep.: R. Campbell, Director of Public Services
Date Tested: August 24, 2017 By: JPC
Soil Description[2]: CLAY, silty, some sand

Sample No.: 6543
Material Type:
Sample Loc.: BH01-S1
Sample Depth: 18.0 - 18.3 m
Sampling Method: grab sample from auger
Date sampled: August 1, 2017
Sampled By: JRC
USC Classification: CH Cu: #N/A
Cc: #N/A

Moisture Content: 32.2%

Particle Size (mm)	Percent Passing
75	
50	
40	
25	100
20	100
12.5	100
10	100
5	100
2	100
0.85	97
0.425	95
0.25	93
0.15	90
0.075	84.4
0.0282	67.8
0.0183	62.0
0.0108	58.6
0.0078	54.4
0.0056	48.6
0.0029	38.5
0.0013	27.6

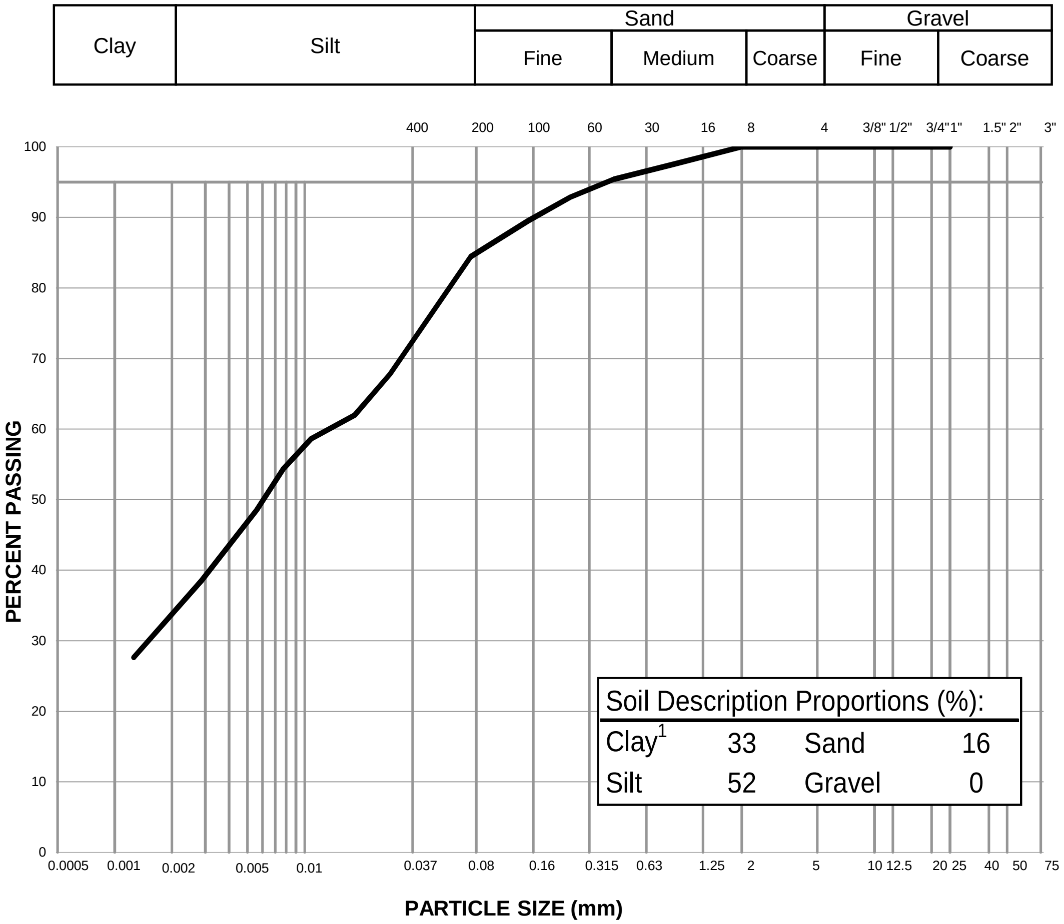

Notes: [1] The upper clay size of 2 um, per the Canadian Foundation Engineering Manual
[2] The description is visually based & subject to Tetra Tech description protocols

Specification:

Remarks:

Reviewed By: RKO P.Eng.

TETRA TECH

PARTICLE SIZE ANALYSIS REPORT

ASTM D422, C136 & C117

Project: Inuvik Water Reservoir
Project No.: YARC03129-01
Site: North Site
Client: City of Inuvik
Client Rep.: R. Campbell, Director of Public Services
Date Tested: August 24, 2017 By: JPC
Soil Description[2]: CLAY, silty, some sand

Sample No.: 6543
Material Type:
Sample Loc.: BH02-N2
Sample Depth: 17.6 - 18.0 m
Sampling Method: grab sample from auger
Date sampled: August 3, 2017
Sampled By: JRC
USC Classification: CH Cu: #N/A
Cc: #N/A

Moisture Content: 30.3%

Particle Size (mm)	Percent Passing
75	
50	
40	
25	100
20	100
12.5	100
10	100
5	100
2	99
0.85	97
0.425	96
0.25	94
0.15	92
0.075	86.6
0.0275	69.6
0.0182	61.5
0.0108	55.9
0.0078	51.8
0.0056	47.0
0.0029	36.4
0.0013	26.7

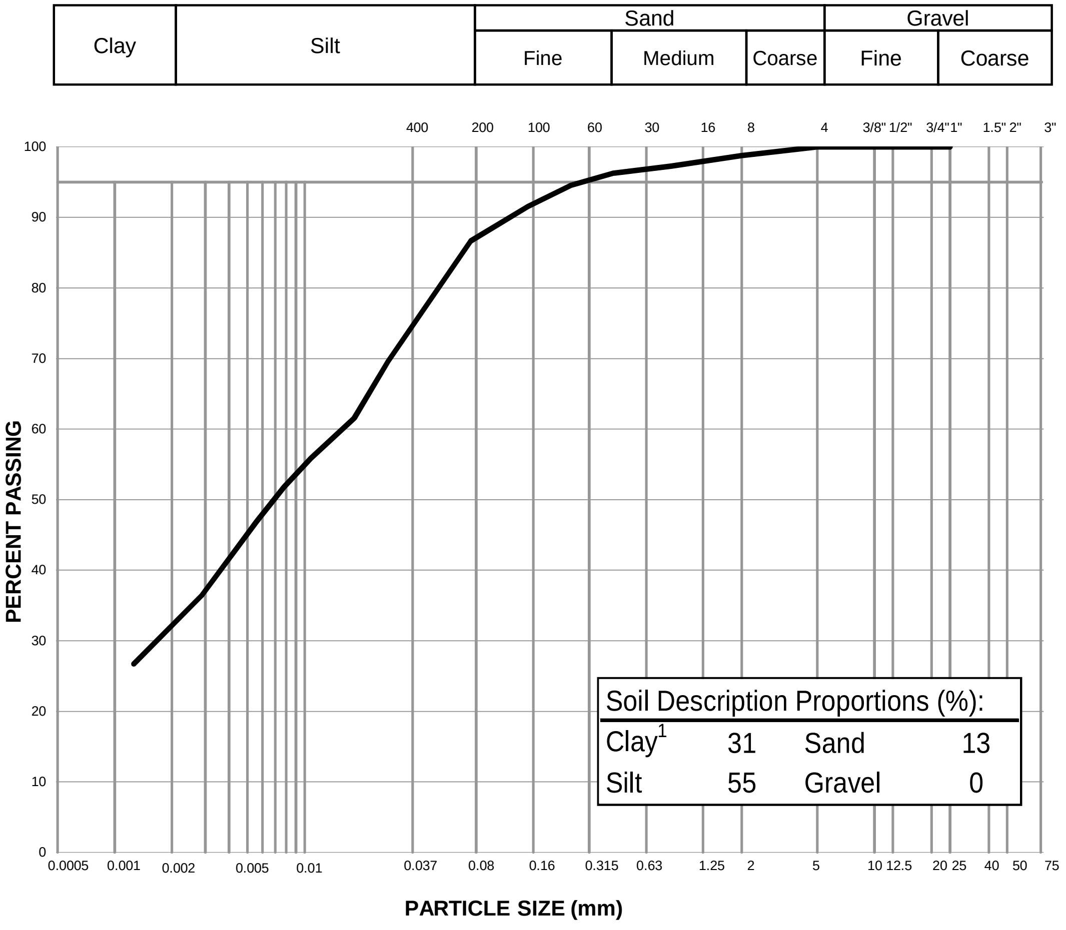

Soil Description Proportions (%):

Clay[1]	31	Sand	13
Silt	55	Gravel	0

Notes: [1] The upper clay size of 2 um, per the Canadian Foundation Engineering Manual
[2] The description is visually based & subject to Tetra Tech description protocols

Specification:

Remarks:

Reviewed By: RKO P.Eng.

TETRA TECH

PARTICLE SIZE ANALYSIS REPORT

ASTM D422, C136 & C117

Project:	Inuvik Water Reservoir		Sample No.:	6543
Project No.:	YARC03129-01		Material Type:	
Site:	North Site		Sample Loc.:	BH03-N3
Client:	City of Inuvik		Sample Depth:	9.9 - 10.2 m
Client Rep.:	R. Campbell, Director of Public Services		Sampling Method:	grab sample from auger
Date Tested:	August 24, 2017	By: JPC	Date sampled:	August 3, 2017
Soil Description[2]:	CLAY, silty, some sand		Sampled By:	JRC
			USC Classification:	CH Cu: #N/A
Moisture Content:	40.7%			Cc: #N/A

Particle Size (mm)	Percent Passing
75	
50	
40	
25	100
20	100
12.5	100
10	100
5	100
2	99
0.85	96
0.425	95
0.25	93
0.15	90
0.075	86.8
0.0273	71.5
0.0178	65.8
0.0105	61.0
0.0076	57.7
0.0055	52.0
0.0028	41.5
0.0012	29.3

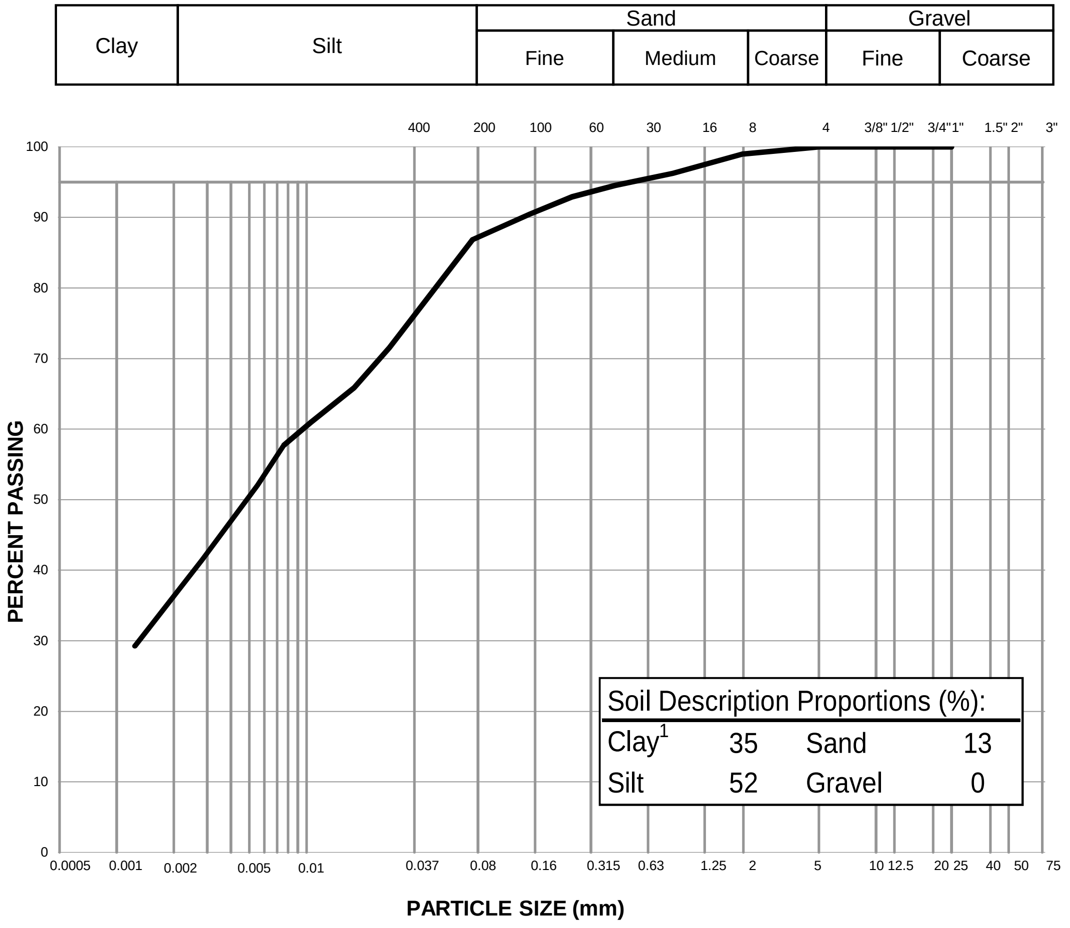

Soil Description Proportions (%):

Clay[1]	35	Sand	13
Silt	52	Gravel	0

Notes: [1] The upper clay size of 2 um, per the Canadian Foundation Engineering Manual

[2] The description is visually based & subject to Tetra Tech description protocols

Specification:

Remarks:

Reviewed By: RKO P.Eng.

TETRA TECH

PARTICLE SIZE ANALYSIS REPORT

ASTM C136 & C117

Project: Inuvik Water Reservoir
North Site

Project Number: ENG.YARC03129-01

Date Tested: August 20, 2017

Borehole Number: BH01-N1

Depth: 2.0 - 2.3 m

Soil Description: GRAVEL, sandy, some silt, some clay

Cu:

Cc:

Natural Moisture Content: 13.4%

Remarks:

Sieve Size (mm)	Percent Passing
50.000	
37.500	100
25.000	66
19.000	66
12.500	58
9.500	56
4.750	50
2.000	43
0.850	39
0.425	35
0.250	33
0.150	30
0.075	26.7

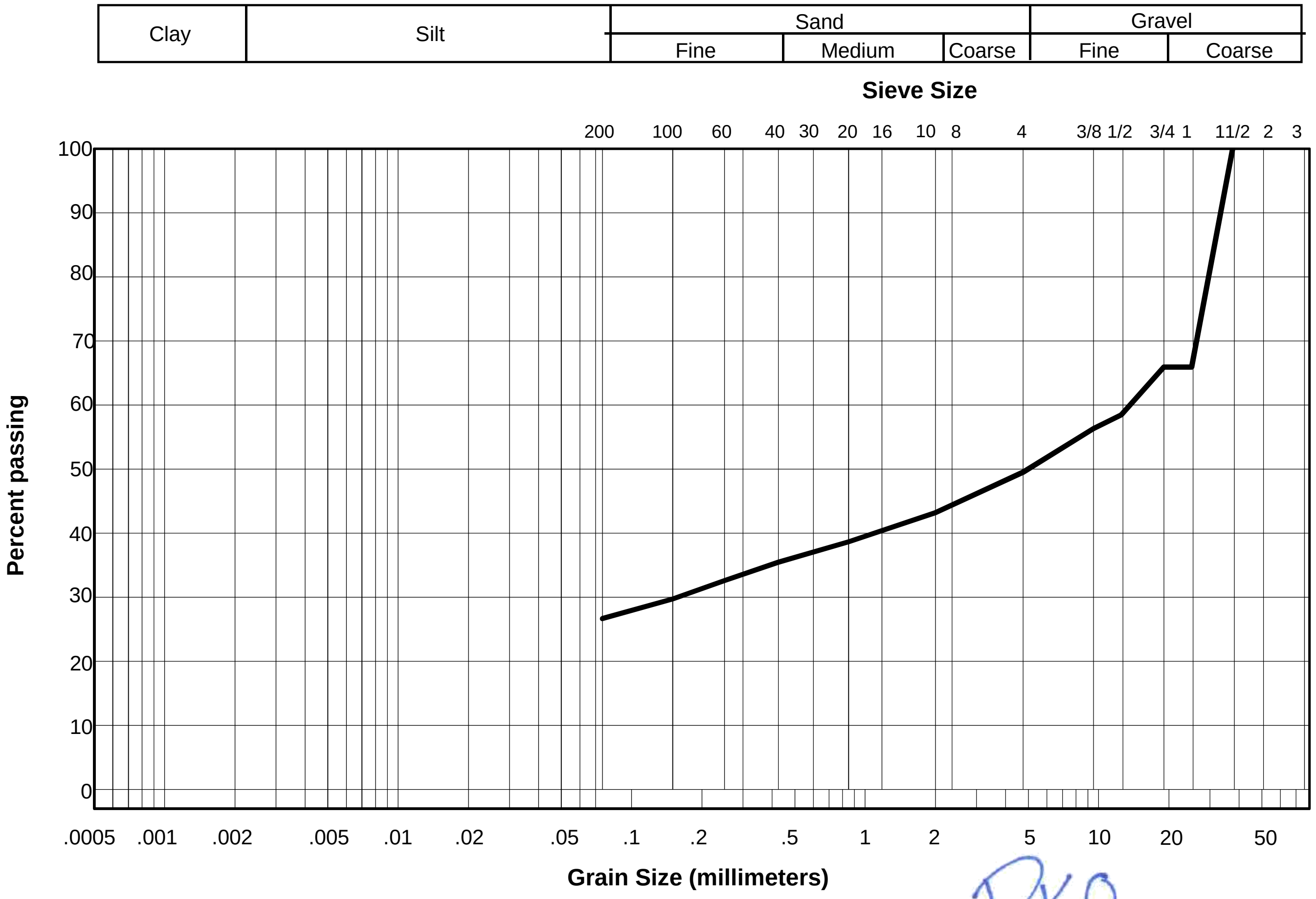

Reviewed By: RKO P.Eng.

TETRA TECH

PARTICLE SIZE ANALYSIS REPORT

ASTM C136 & C117

Project: Inuvik Water Reservoir
South Site
Project Number: ENG.YARC03129-01
Date Tested: August 20, 2017
Borehole Number: BH01-S1
Depth: 6.1 - 6.4 m
Soil Description: SILT, some gravel, some sand, trace clay
Cu:
Cc:
Natural Moisture Content: 133.4%
Remarks:

Sieve Size (mm)	Percent Passing
50.000	
37.500	100
25.000	91
19.000	86
12.500	86
9.500	86
4.750	83
2.000	80
0.850	78
0.425	76
0.250	75
0.150	73
0.075	69.9

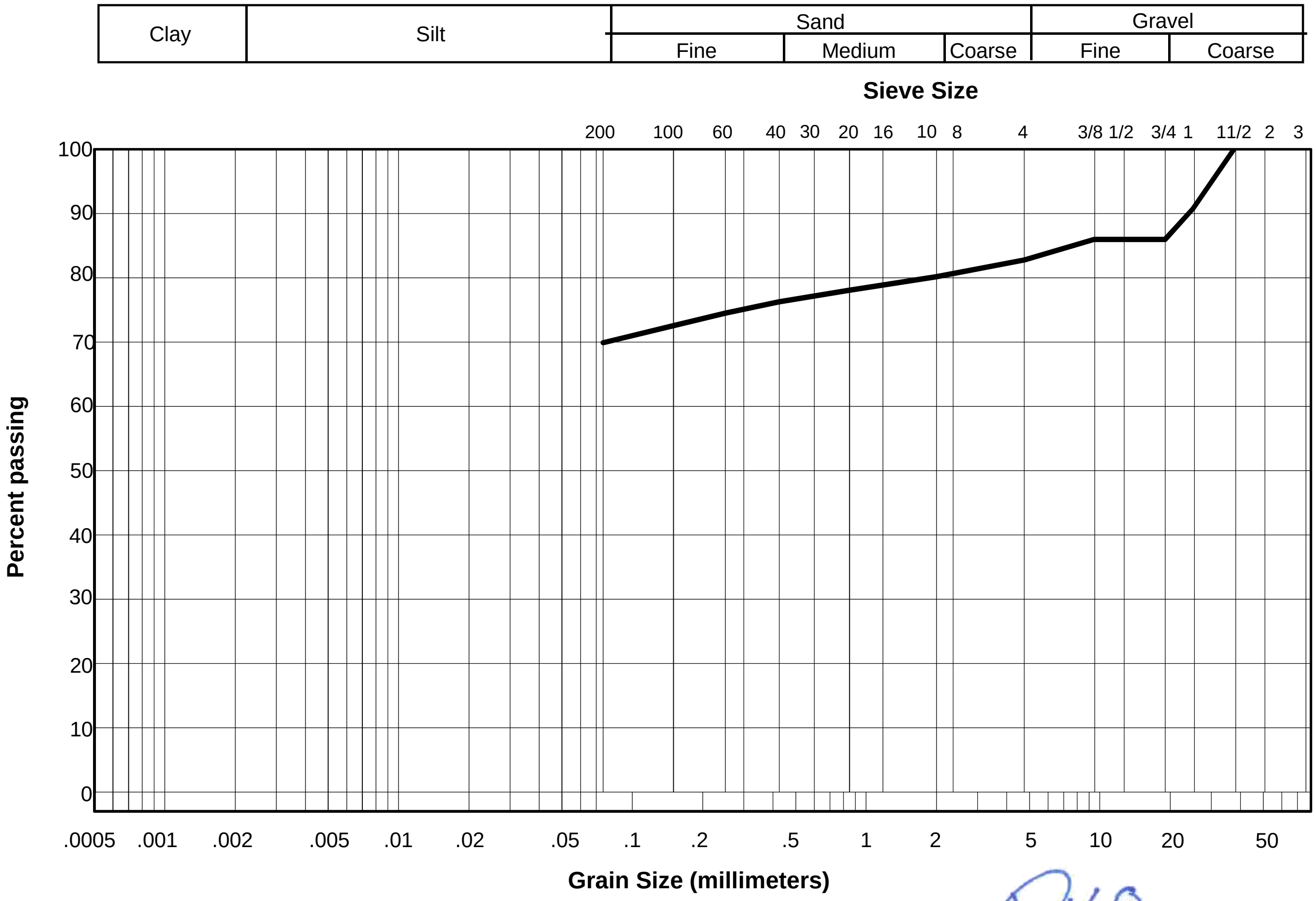

Reviewed By: RKO P.Eng.

TETRA TECH

PARTICLE SIZE ANALYSIS REPORT

ASTM C136 & C117

Project: Inuvik Water Reservoir
North Site

Project Number: ENG.YARC03129-01

Date Tested: August 20, 2017

Borehole Number: BH02-N2

Depth: 8.5 - 8.9 m

Soil Description: SILT, some sand, some clay, trace gravel

Cu:

Cc:

Natural Moisture Content: 128.8%

Remarks:

Sieve Size (mm)	Percent Passing
50.000	
37.500	
25.000	
19.000	
12.500	100
9.500	97
4.750	96
2.000	95
0.850	94
0.425	93
0.250	91
0.150	86
0.075	75.8

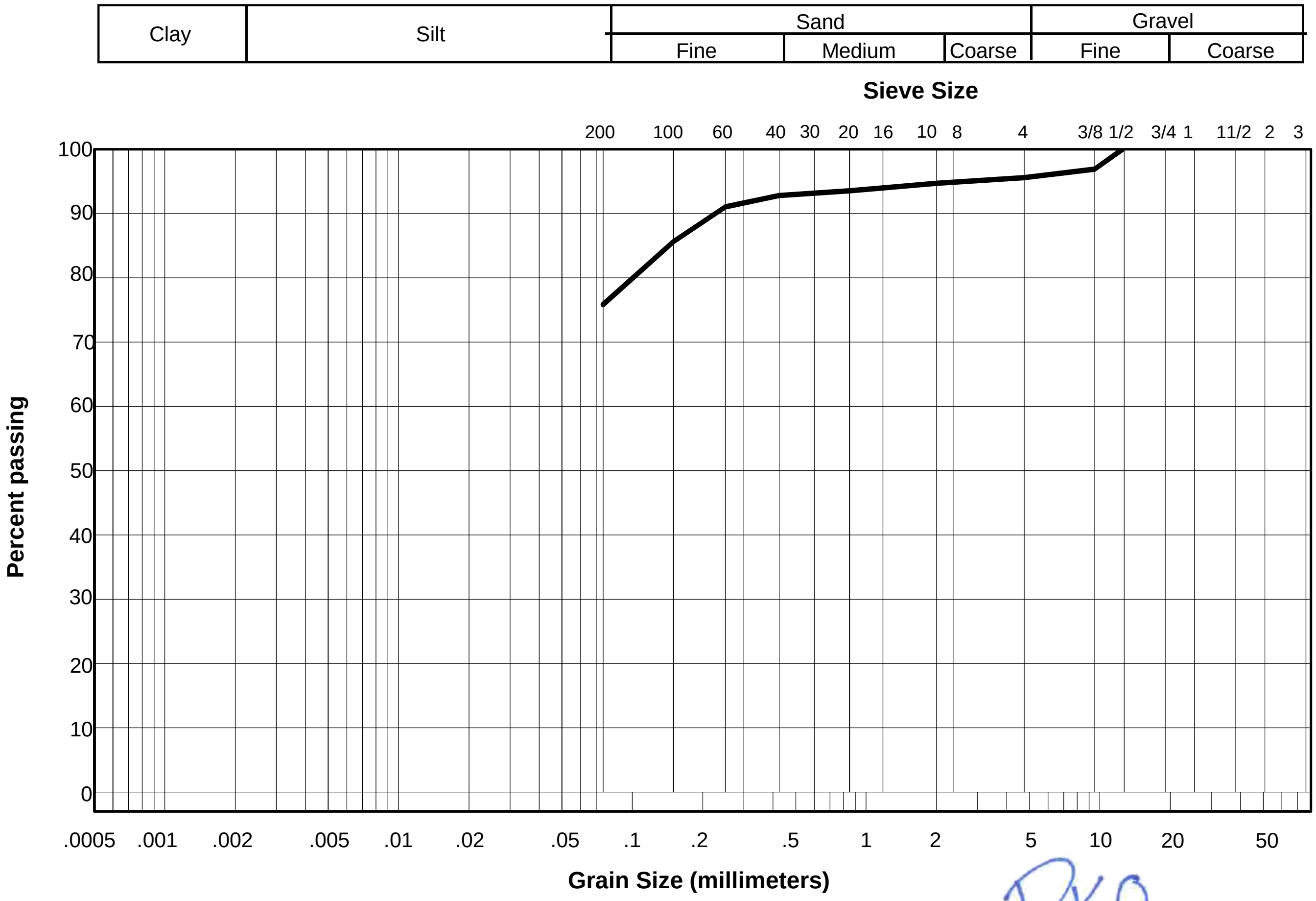

Reviewed By: RKO P.Eng.

TETRA TECH

PARTICLE SIZE ANALYSIS REPORT

ASTM C136 & C117

Project: Inuvik Water Reservoir
South Site

Project Number: ENG.YARC03129-01

Date Tested: August 20, 2017

Borehole Number: BH02-S2

Depth: 16.1 - 16.3 m

Soil Description: CLAY, silty, sandy, trace gravel

Cu:

Cc:

Natural Moisture Content: 32.7%

Remarks:

Sieve Size (mm)	Percent Passing
50.000	
37.500	
25.000	
19.000	
12.500	100
9.500	99
4.750	96
2.000	92
0.850	89
0.425	86
0.250	83
0.150	79
0.075	73.0

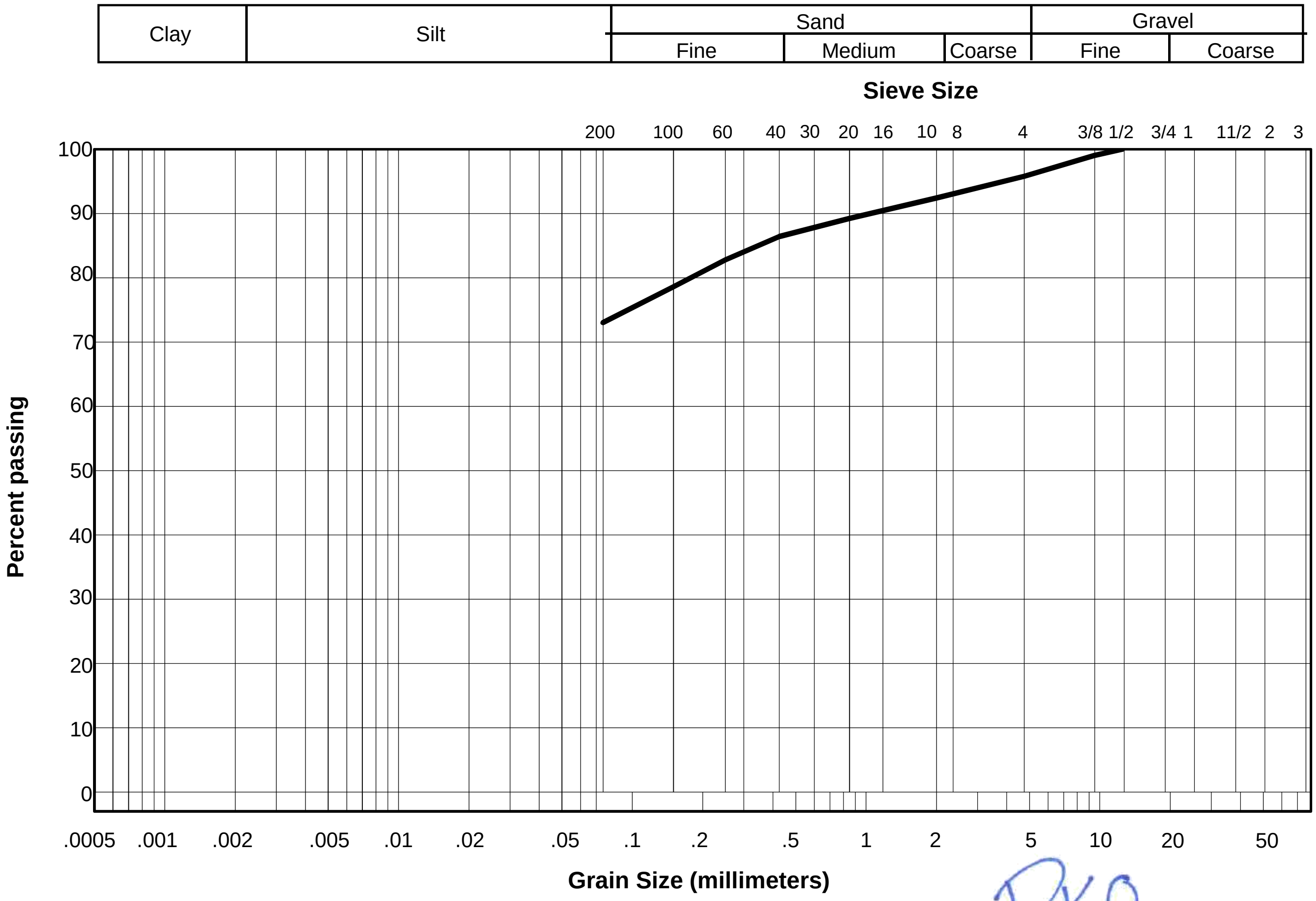

Reviewed By: RKO P.Eng.

TETRA TECH

PARTICLE SIZE ANALYSIS REPORT

ASTM C136 & C117

Project: Inuvik Water Reservoir
North Site

Project Number: ENG.YARC03129-01

Date Tested: August 20, 2017

Borehole Number: BH03-N3

Depth: 8.0 - 8.3 m

Soil Description: SILT, some sand, trace clay, trace gravel

Cu:

Cc:

Natural Moisture Content: 52.5%

Remarks:

Sieve Size (mm)	Percent Passing
50.000	
37.500	
25.000	
19.000	
12.500	
9.500	100
4.750	99
2.000	96
0.850	93
0.425	91
0.250	89
0.150	86
0.075	80.7

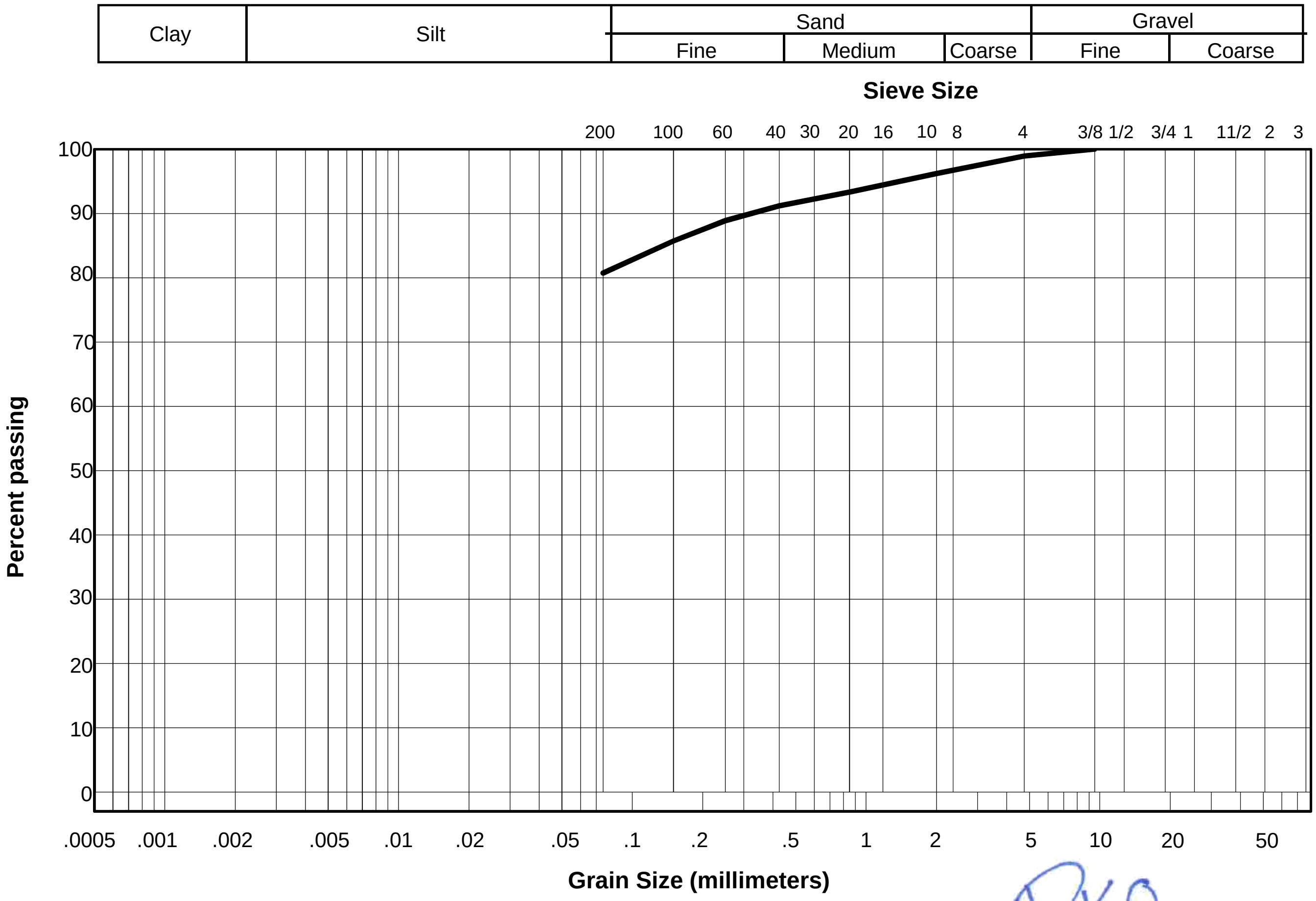

Reviewed By: RKO P.Eng.

PARTICLE SIZE ANALYSIS REPORT

ASTM C136 & C117

Project: Inuvik Water Reservoir
North Site

Project Number: ENG.YARC03129-01

Date Tested: August 20, 2017

Borehole Number: BH04-N4

Depth: 12.4 - 12.7 m

Soil Description: SILT, some sand, trace clay, trace gravel

Cu:

Cc:

Natural Moisture Content: 41.2%

Remarks:

Sieve Size (mm)	Percent Passing
50.000	#N/A
37.500	#N/A
25.000	#N/A
19.000	100
12.500	98
9.500	98
4.750	96
2.000	94
0.850	91
0.425	89
0.250	86
0.150	83
0.075	79.1

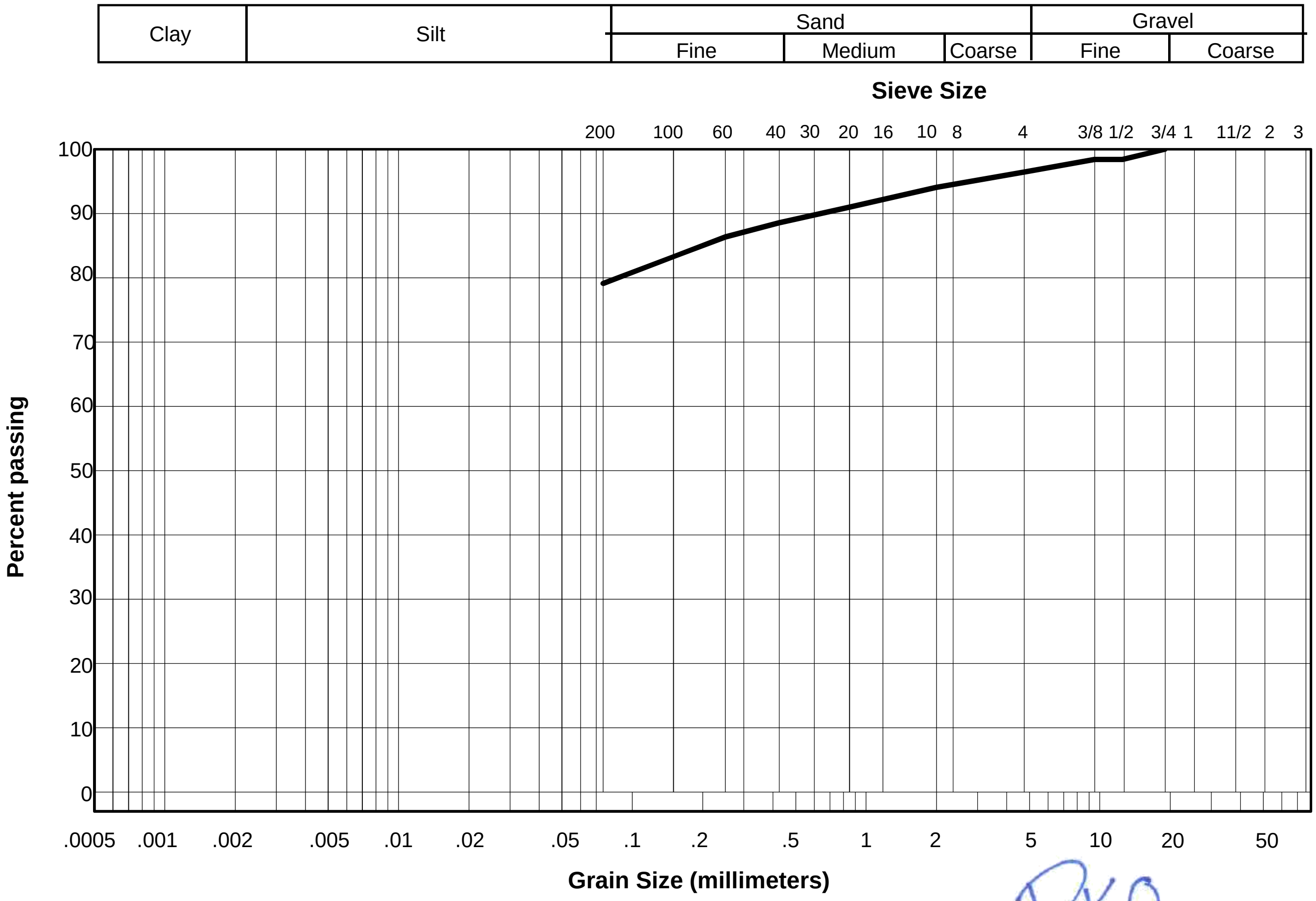

Reviewed By: RKO P.Eng.

TETRA TECH

SOLUBLE SULPHATE ION CONTENT OF SOIL

(CSA Designation A23.2-2B & A23.2-3B)

Project: Geotechnical Evaluation for New Water Reservoir, Inuvik, NT

Date Tested: September 11, 2017

Project No.: 704-ENG.YARC03129-01

Tested By: EM

Client: Town of Inuvik

Sample Source: BH01-N1, BH02-N2

Location: North Site

Laboratory: Calgary

Sample Number	2	1				
Borehole Number	BH01-N1	BH02-N2				
Depth (m)	2.0-2.3	1.1-1.4				
Sulphate Content %	1.36	0.04				
Degree of Exposure (Class)	Severe	Negligible				

Class of exposure	Degree of exposure	Water-soluble sulphate (SO_4)† in soil sample, %	Sulphate (SO_4) in groundwater samples, mg/L‡	Water soluble sulphate (SO_4) in recycled aggregate sample, %	Cementing materials to be used§
S-1	Very severe	> 2.0	> 10 000	> 2.0	HS or HSb
S-2	Severe	0.20–2.0	1500–10 000	0.60–2.0	HS or HSb
S-3	Moderate	0.10–0.20	150–1500	0.20–0.60	MS, MSb, LH, HS, or HSb

**For sea water exposure, see Clause 4.1.1.5.*

†In accordance with CSA A23.2-3B.

‡In accordance with CSA A23.2-2B.

§Cementing material combinations with equivalent performance may be used (see Clauses 4.2.1.2, 4.2.1.3, and 4.2.1.4). Type HS cement shall not be used in reinforced concrete exposed to both chlorides and sulphates. Refer to Clause 4.1.1.6.3.

Limitations:

i) The degree of exposure class included herein are valid only if drainage and weeping systems meet the requirements of the site conditions.

ii) The degree exposure class should be re-verified if backfill soils for foundation walls originate from an unknown source.

Remarks:

Reviewed By: P.Geol.

ATTERBERG LIMITS TEST REPORT

ASTM D4318

Project:	Inuvik Water Reservoir	Sample Number:	6543
	North Site	Borehole Number:	BH01-N1
Project No:	ENG.YARC03129-01	Depth:	11.1 - 11.4 m
Client:	City of Inuvik	Sampled By:	JRC Tested By: TO
Attention:	R. Campbell, Director of Public Service	Date Sampled:	August 1, 2017
Email:	RCampbell@town.inuvik.nt.ca	Date Tested:	August 20, 2017

Sample Description: CLAY, silty, trace sand, light reddish-brown to grey

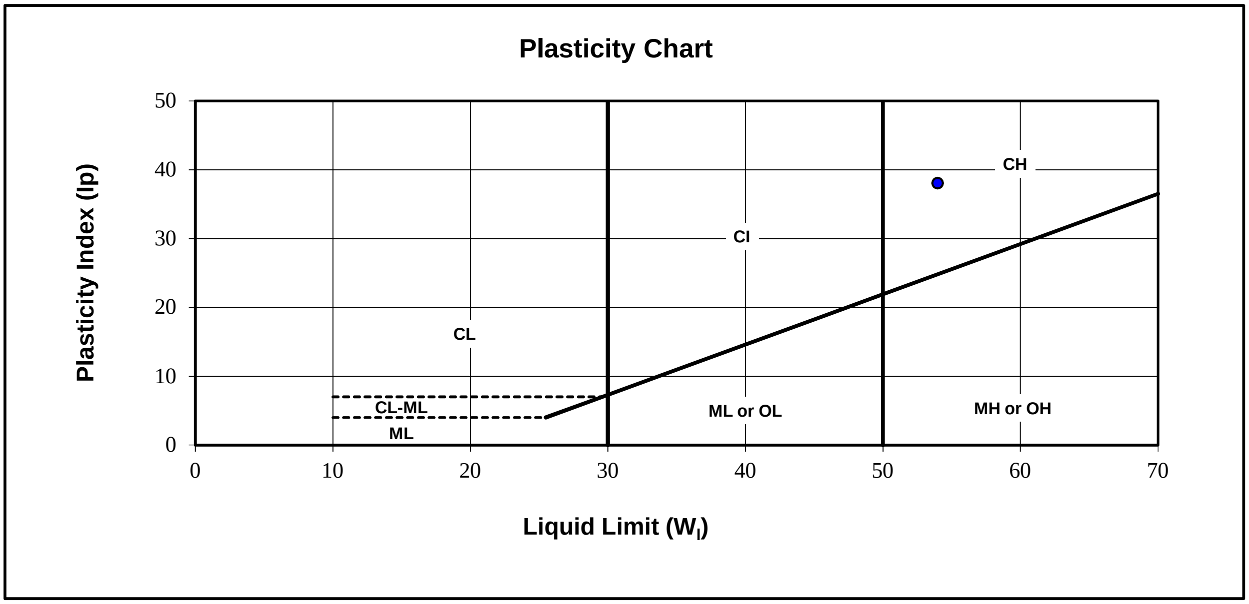

Liquid Limit ($W_{1)}$:	54	Natural Moisture (%)	56.5
Plastic Limit :	16	Soil Plasticity:	High
Plasticity Index (Ip) :	**38**	Mod.USCS Symbol:	CH

Remarks:

Reviewed By: RKO P.Eng.

TETRA TECH

ATTERBERG LIMITS TEST REPORT

ASTM D4318

Project: Inuvik Water Reservoir
North Site
Project No: ENG.YARC03129-01
Client: City of Inuvik
Attention: R. Campbell, Director of Public Service
Email: RCampbell@town.inuvik.nt.ca

Sample Number: 6543
Borehole Number: BH02-N2
Depth: 17.6 - 18.0 m
Sampled By: JRC Tested By: TO
Date Sampled: August 1, 2017
Date Tested: August 20, 2017

Sample Description: CLAY, silty, light reddish-brown to grey

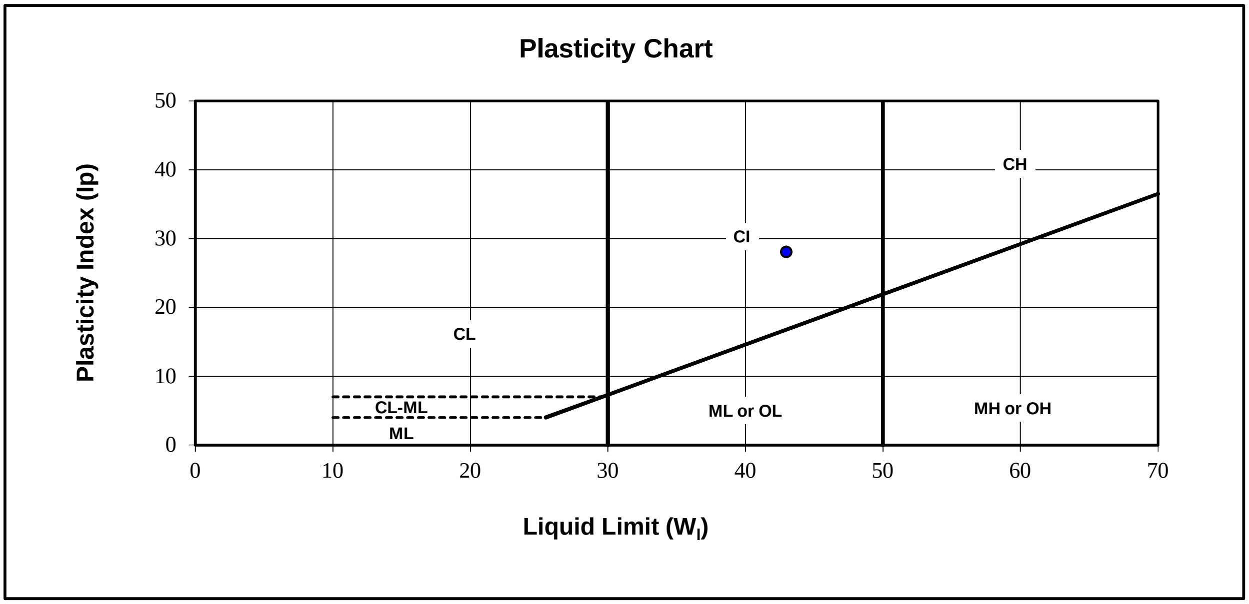

Liquid Limit ($W_{1)}$: 43
Plastic Limit : 15
Plasticity Index (Ip) : **28**

Natural Moisture (%) 30.3
Soil Plasticity: Medium
Mod.USCS Symbol: CI

Remarks:

Reviewed By: RKO P.Eng.

ATTERBERG LIMITS TEST REPORT

ASTM D4318

Project:	Inuvik Water Reservoir	Sample Number:	6543
	North Site	Borehole Number:	BH03-N3
Project No:	ENG.YARC03129-01	Depth:	9.9 - 10.2 m
Client:	City of Inuvik	Sampled By:	JRC Tested By: TO
Attention:	R. Campbell, Director of Public Service	Date Sampled:	August 1, 2017
Email:	RCampbell@town.inuvik.nt.ca	Date Tested:	August 20, 2017

Sample Description: CLAY, silty, some sand

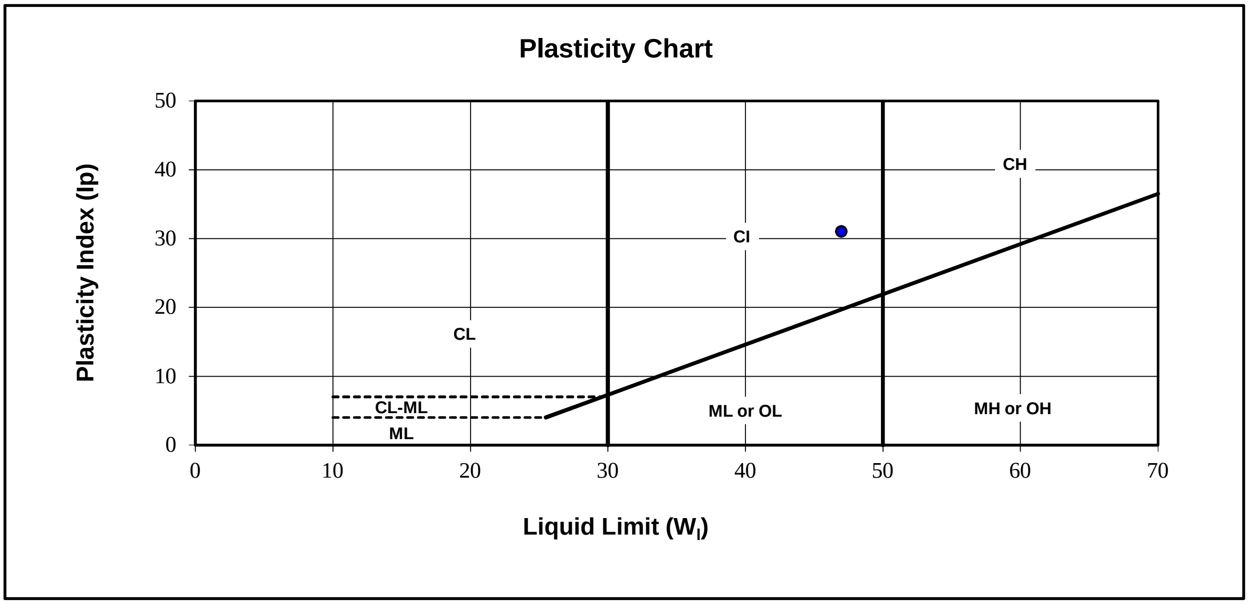

Liquid Limit ($W_{1)}$) :	47	Natural Moisture (%)	40.7
Plastic Limit :	16	Soil Plasticity:	Medium
Plasticity Index (Ip) :	**31**	Mod.USCS Symbol:	CI

Remarks:

Reviewed By: RKO P.Eng.

TETRA TECH

ATTERBERG LIMITS TEST REPORT

ASTM D4318

Project: Inuvik Water Reservoir
North Site

Project No: ENG.YARC03129-01

Client: City of Inuvik

Attention: R. Campbell, Director of Public Service

Email: RCampbell@town.inuvik.nt.ca

Sample Number: 6543

Borehole Number: BH04-N4

Depth: 9.8 - 10.1 m

Sampled By: JRC Tested By: TO

Date Sampled: August 1, 2017

Date Tested: August 20, 2017

Sample Description: CLAY, silty, trace sand, occasional gravel

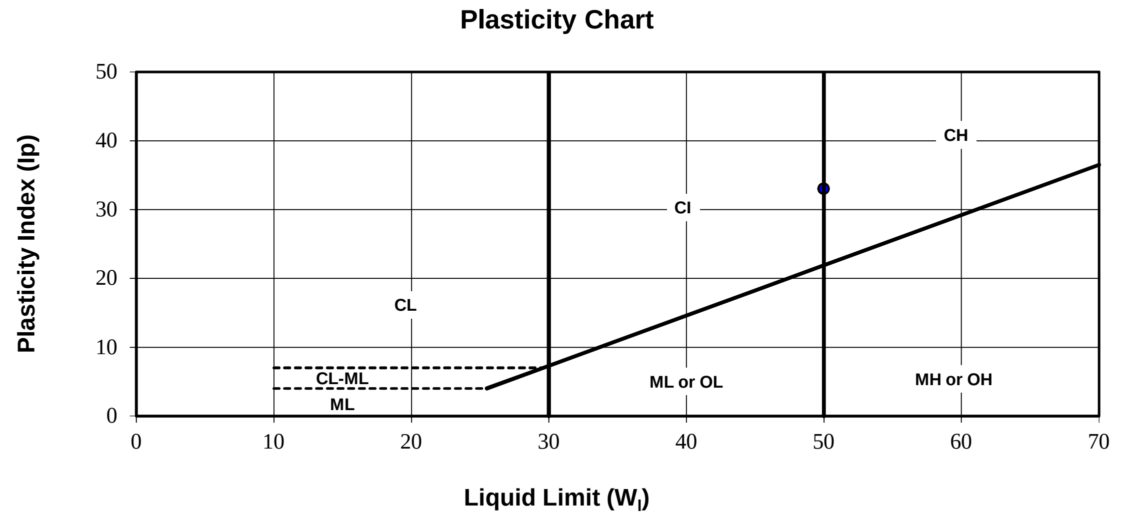

Liquid Limit (W$_{1)}$: 50

Plastic Limit : 17

Plasticity Index (Ip) : **33**

Natural Moisture (%) 48.5

Soil Plasticity: Medium to High

Mod.USCS Symbol: CI

Remarks:

Reviewed By: RKO P.Eng.

Determination of the Soluble Salt Content of Soils by Refractometer

ASTM D4542

Project:	Inuvik Water Reservoir	**Sample No.:**	BH01-N1, BH02-N2
Project No:	ENG.YARC03129-01	**Date Sampled:**	
Client:	Town of Inuvik	**Sampled By:**	
		Date Tested:	September 8, 2017
Attention:	Ed Grozic	**Tested By:**	MC
Email:	Ed.Grozic@tetratech.com	**Office:**	Edmonton

Sample No.	Location	Depth (m)	Soil Type	Salinity (ppt)
	BH01-N1	3.0-4.7	CLAY, silty, saturated, dark grey	0.6
	BH01-N1	16.7-18.2	CLAY, silty, very soft, dark grey	0.8
	BH02-N2	6.2-7.6	CLAY, silty, wet, dark grey	1.0
	BH02-N2	14.6-16.4	CLAY, silty, trace gravel, very soft, dark grey	1.5

Remarks:

Reviewed By: ______________________ P.Eng.

TETRA TECH

APPENDIX D

DESIGN AND CONSTRUCTION GUIDELINES

SHALLOW FOUNDATIONS

Design and construction of shallow foundations should comply with relevant Building Code requirements.

The term ‘shallow foundations’ includes strip and spread footings, mat slab, and raft foundations.

Minimum footing dimensions in plan should be in accordance with the applicable design code of the local jurisdiction.

No loose, disturbed or sloughed material should be allowed to remain in open foundation excavations. Hand cleaning should be undertaken to prepare an acceptable bearing surface.

Foundation excavations and bearing surfaces should be protected from rain, snow, freezing temperatures, excessive drying, and the ingress of free water before, during, and after footing construction.

Footing excavations should be carried down into the designated bearing stratum.

After the bearing surface is approved, a mud slab should be poured to protect the soil against inclement weather and provide a working surface for construction.

All constructed foundations should be placed on unfrozen soils, which should be at all times protected from frost penetration.

All foundation excavations and bearing surfaces should be inspected by a qualified geotechnical engineer to check that the recommendations contained in this report have been followed.

Where over-excavation has been carried out through a weak or unsuitable stratum to reach into a suitable bearing stratum or where a foundation pad is to be placed above stripped natural ground surface such over-excavation may be backfilled to subgrade elevation utilizing either structural fill or lean-mix concrete. These materials are defined below:

- “Structural engineered fill” should comprise clean, well-graded granular soils.
- “Lean-mix concrete” should be low strength concrete having a minimum 28-day compressive strength of 3.5 MPa.

CONSTRUCTION EXCAVATIONS

Construction should be in accordance with good practice and comply with the requirements of the responsible regulatory agencies.

All excavations greater than 1.5 m deep should be sloped or shored for worker protection.

Shallow excavations up to about 3 m depth may use temporary sideslopes of 1H:1V. A flatter slope of 2H:1V should be used if groundwater is encountered. Localized sloughing can be expected from these slopes.

Deep excavations or trenches may require temporary support if space limitations or economic considerations preclude the use of sloped excavations.

For excavations greater than 3 m depth, temporary support should be designed by a qualified geotechnical engineer. The design and proposed installation and construction procedures should be submitted to Tetra Tech for review.

The construction of a temporary support system should be monitored. Detailed records should be taken of installation methods, materials, in situ conditions and the movement of the system. If anchors are used, they should be load tested. Tetra Tech can provide further information on monitoring and testing procedures if required.

Attention should be paid to structures or buried service lines close to the excavation. For structures, a general guideline is that if a line projected down, at 45 degrees from the horizontal from the base of foundations of adjacent structures intersects the extent of the proposed excavation, these structures may require underpinning or special shoring techniques to avoid damaging earth movements. The need for any underpinning or special shoring techniques and the scope of monitoring required can be determined when details of the service ducts and vaults, foundation configuration of existing buildings and final design excavation levels are known.

No surface surcharges should be placed closer to the edge of the excavation than a distance equal to the depth of the excavation, unless the excavation support system has been designed to accommodate such surcharge.

BACKFILL MATERIALS AND COMPACTION (GENERAL)

1.0 DEFINITIONS

“Landscape fill” is typically used in areas such as berms and grassed areas where settlement of the fill and noticeable surface subsidence can be tolerated. “Landscape fill” may comprise soils without regard to engineering quality.

“General engineered fill” is typically used in areas where a moderate potential for subgrade movement is tolerable, such as asphalt (i.e., flexible) pavement areas. “General engineered fill” should comprise clean, granular or clay soils.

“Select engineered fill” is typically used below slabs-on-grade or where high volumetric stability is desired, such as within the footprint of a building. “Select engineered fill” should comprise clean, well-graded granular soils or inorganic low to medium plastic clay soils.

“Structural engineered fill” is used for supporting structural loads in conjunction with shallow foundations. “Structural engineered fill” should comprise clean, well-graded granular soils.

“Lean-mix concrete” is typically used to protect a subgrade from weather effects including excessive drying or wetting. “Lean-mix concrete” can also be used to provide a stable working platform over weak subgrades. “Lean-mix concrete” should be low strength concrete having a minimum 28-day compressive strength of 3.5 MPa.

Standard Proctor Density (SPD) as used herein means Standard Proctor Maximum Dry Density (ASTM Test Method D698). Optimum moisture content is defined in ASTM Test Method D698.

2.0 GENERAL BACKFILL AND COMPACTION RECOMMENDATIONS

Exterior backfill adjacent to abutment walls, basement walls, grade beams, pile caps and above footings, and below highway, street, or parking lot pavement sections should comprise “general engineered fill” materials as defined above.

Exterior backfill adjacent to footings, foundation walls, grade beams and pile caps and within 600 mm of final grade should comprise inorganic, cohesive “general engineered fill”. Such backfill should provide a relatively impervious surficial zone to reduce seepage into the subsoil against the structure.

Backfill should not be placed against a foundation structure until the structure has sufficient strength to withstand the earth pressures resulting from placement and compaction. During compaction, careful observation of the foundation wall for deflection should be carried out continuously. Where deflections are apparent, the compactive effort should be reduced accordingly.

In order to reduce potential compaction induced stresses, only hand-held compaction equipment should be used in the compaction of fill within 1 m of retaining walls or basement walls. If compacted fill is to be placed on both sides of the wall, they should be filled together so that the level on either side is within 0.5 m of each other.

All lumps of materials should be broken down during placement. Backfill materials should not be placed in a frozen state, or placed on a frozen subgrade.

Where the maximum-sized particles in any backfill material exceed 50% of the minimum dimension of the cross-section to be backfilled (e.g., lift thickness), such particles should be removed and placed at other more suitable locations on site or screened off prior to delivery to site.

Excavation and construction operations expose materials to climatic elements (freeze/thaw, wet/dry) and/or mechanical disturbance which can cause severe deterioration of performance. Unless otherwise specifically indicated in this report, the walls and floors of excavations, and stockpiles, must be protected from the elements, particularly moisture, desiccation, frost, and construction activities. Should desiccation occur, bonding should be provided between backfill lifts. For fine-grained materials the previous lift should be scarified to the base of the desiccated layer, moisture-conditioned, and recompacted and bonded thoroughly to the succeeding lift. For granular materials, the surface of the previous lift should be scarified to about a 75 mm depth followed by proper moisture-conditioning and recompaction.

3.0 COMPACTION AND MOISTURE CONDITIONING

“Landscape fill” material should be placed in compacted lifts not exceeding 300 mm and compacted to a density of not less than 90% of SPD unless a higher percentage is specified by the jurisdiction.

“General engineered fill” and “select engineered fill” materials should be placed in layers of 150 mm compacted thickness and should be compacted to not less than 98% of SPD. Note that the contract may specify higher compaction levels within 300 mm of the design elevation. Cohesive materials placed as “general engineered fill” or “select engineered fill” should be compacted at 0 to 2% above the optimum moisture content. Note that there are some silty soils which can become quite unstable when compacted above optimum moisture content. Granular materials placed as “general engineered fill” or “select engineered fill” should be compacted at slightly below (0 to 2%) the optimum moisture content.

“Structural engineered fill” material should be placed in compacted lifts not exceeding 150 mm in thickness and compacted to not less than 100% of SPD at slightly below (0 to 2%) the optimum moisture content.

4.0 “GENERAL ENGINEERED FILL”

Low to medium plastic clay is considered acceptable for use as “general engineered fill,” assuming this material is inorganic and free of deleterious materials.

Materials meeting the specifications for “select engineered fill” or “structural engineered fill” as described below would also be acceptable for use as “general engineered fill.”

5.0 “SELECT ENGINEERED FILL”

Low to medium plastic clay with the following range of plasticity properties is generally considered suitable for use as “select engineered fill”:

Liquid Limit = 20 to 40%

Plastic Limit = 10 to 20%

Plasticity Index = 10 to 30%

Test results should be considered on a case-by-case basis.

“Pit-run gravel” and “fill sand” are generally considered acceptable for use as “select engineered fill.” See exact project or jurisdiction for specifications.

The “pit-run gravel” should be free of any form of coating and any gravel or sand containing clay, loam or other deleterious materials should be rejected. No material oversize of the specified maximum sieve size should be tolerated. This material would typically have a fines content of less than 10%.

The materials above are also suitable for use as “general engineered fill.”

6.0 “STRUCTURAL ENGINEERED FILL”

Crushed gravel used as “structural engineered fill” should be hard, clean, well graded, crushed aggregate, free of organics, coal, clay lumps, coatings of clay, silt, and other deleterious materials. The aggregates should conform to the requirement when tested in accordance with ASTM C136 and C117. See exact project or jurisdiction for specifications. This material would typically have a fines content of less than 10%.

In addition to the above, further specification criteria identified below should be met:

“Structural Engineered Fill” – Additional Material Properties

Material Type	Percentage of Material Retained on 5 mm Sieve having Two or More Fractured Faces	Plasticity Index (<400 μm)	L.A. Abrasion Loss (percent Mass)
Various sized Crushed Gravels	See exact project or jurisdiction for specifications	See exact project or jurisdiction for specifications	See exact project or jurisdiction for specifications

Materials that meet the grading limits and material property criteria are also suitable for use as “select engineered fill.”

7.0 DRAINAGE MATERIALS

“Coarse gravel” for drainage or weeping tile bedding should be free draining. Free-draining gravel or crushed rock generally containing no more than 5% fine-grained soil (particles passing No. 200 sieve) based on the fraction passing the 3/4-inch sieve or material with sand equivalent of at least 30.

“Coarse sand” for drainage should conform to the following grading limits:

“Coarse Sand” Drainage Material – Percent Passing by Weight

Sieve Size	Coarse Sand*
10 mm	100
5 mm	95 – 100
2.5 mm	80 – 100
1.25 mm	50 – 90
630 μm	25 – 65
315 μm	10 – 35
160 μm	2 – 10
80 μm	0 – 3

* From CSA A23.1-09, Table 10, “Grading Limits for Fine Aggregate”, Class FA1

Note that the “coarse sand” above is also suitable for use as pipe bedding material. See exact project or jurisdiction for specifications.

8.0 BEDDING MATERIALS

The “Coarse Sand “gradation presented above in Section 7.0 is suitable for use as pipe bedding and as backfill within the pipe embedment zone, however see exact project or jurisdiction for specifications.

APPENDIX E

THERMOPROBE / THERMOSYPHON SYSTEMS

THERMOPROBE CONCEPT

Thermosyphons are heat-transfer devices that have been used for foundation stabilization in continuous and discontinuous permafrost areas since the 1960's in Alaska, and since the mid-1970's in Canada. Thermosyphons are used to passively refrigerate the ground to create or maintain permafrost. The process is "passive" because no man-made energy is needed to maintain the cooling process, which is ideal for a remote location with no source of power.

Thermosyphons are pressurized sealed pipes that contain a two-phase fluid such as carbon dioxide. The carbon dioxide turns to vapour in the underground portion of the pipe, the "evaporator" section, which is being warmed by the ground. The vapour, being less dense than the liquid, flows upward through the piping system. The carbon dioxide vapour turns to liquid in the portion of the pipe that is above the ground, the "radiator/condenser" section, which is being cooled by the surrounding air. The liquid then flows back down into the lower piping to repeat the cycle. Because it takes energy to turn liquid into vapour, the process of liquid turning to vapour extracts energy (heat) from the ground around the pipe and transports that energy (heat) up to where the radiator can dissipate it into the surrounding air. The cycle keeps itself going during the winter, or as long as the outside air is colder than the ground.

There are two main types of thermosyphons, as marketed by the only manufacturer currently in Canada (Arctic Foundations of Canada Inc.):

- Thermoprobes, which are non-structural pipes whose sole purpose is to cool the ground, and
- Thermopiles, which are structural pipes that can support loads as well as cool the ground.

Thermoprobes can be further divided into flat-loop pipes, sloping-evaporator pipes, totally-buried, hybrid systems, or vertical pipes, with the type of Thermoprobe referring to the evaporator (underground) section of the pipes. Flat-loop thermoprobes are the more commonly constructed thermosyphons these days, since it is easier to construct a flat foundation area for a slab-on-grade, and easier to maintain a uniform temperature under a building when the thermosyphons are flat. Sloping-evaporator thermoprobes were more common in the past, when the state of the technology required a significant slope (3 to 10 percent) to maintain the phase change cycle. Current flat-loop thermoprobes have typical pipe diameters of about 25 mm, and vertical or sloped thermoprobes have typical diameters of 60 to 75 mm. Totally-buried pipes have been used to maintain frozen ground below an embankment, while releasing heat in the near-surface soils.

The geometry of the radiator section, local climate (wind speed and air temperature) and ground temperature will determine the cooling capacity achievable in the Thermoprobe. Probe diameter and length have only limited effect on the cooling capacity, but will influence the distribution of the changes in ground temperature.

Thermoprobes only operate when the ground surrounding the evaporator section is warmer than the ambient air. Therefore, each summer, there will be a period of several months when heat is not transferred out of the ground, and the ground surrounding the Thermoprobes warms up and may thaw. Thermoprobes need to be designed to limit thaw within the subgrade materials to satisfy the design life of the structure. Insulation may or may not be required in the design. Thermal analysis is required to determine the configuration needed.

Further information from Arctic Foundations of Canada, and Arctic Foundations Inc., on Thermoprobes and Thermosyphons is provided on the following pages

Excavation and construction operations expose materials to climatic elements (freeze/thaw, wet/dry) and/or mechanical disturbance which can cause severe deterioration of performance. Unless otherwise specifically indicated in this report, the walls and floors of excavations, and stockpiles, must be protected from the elements, particularly moisture, desiccation, frost, and construction activities. Should desiccation occur, bonding should be provided between backfill lifts. For fine-grained materials the previous lift should be scarified to the base of the desiccated layer, moisture-conditioned, and recompacted and bonded thoroughly to the succeeding lift. For granular materials, the surface of the previous lift should be scarified to about a 75 mm depth followed by proper moisture-conditioning and recompaction.

3.0 COMPACTION AND MOISTURE CONDITIONING

“Landscape fill” material should be placed in compacted lifts not exceeding 300 mm and compacted to a density of not less than 90% of SPD unless a higher percentage is specified by the jurisdiction.

“General engineered fill” and “select engineered fill” materials should be placed in layers of 150 mm compacted thickness and should be compacted to not less than 98% of SPD. Note that the contract may specify higher compaction levels within 300 mm of the design elevation. Cohesive materials placed as “general engineered fill” or “select engineered fill” should be compacted at 0 to 2% above the optimum moisture content. Note that there are some silty soils which can become quite unstable when compacted above optimum moisture content. Granular materials placed as “general engineered fill” or “select engineered fill” should be compacted at slightly below (0 to 2%) the optimum moisture content.

“Structural engineered fill” material should be placed in compacted lifts not exceeding 150 mm in thickness and compacted to not less than 100% of SPD at slightly below (0 to 2%) the optimum moisture content.

4.0 “GENERAL ENGINEERED FILL”

Low to medium plastic clay is considered acceptable for use as “general engineered fill,” assuming this material is inorganic and free of deleterious materials.

Materials meeting the specifications for “select engineered fill” or “structural engineered fill” as described below would also be acceptable for use as “general engineered fill.”

5.0 “SELECT ENGINEERED FILL”

Low to medium plastic clay with the following range of plasticity properties is generally considered suitable for use as “select engineered fill”:

Liquid Limit = 20 to 40%

Plastic Limit = 10 to 20%

Plasticity Index = 10 to 30%

Test results should be considered on a case-by-case basis.

“Pit-run gravel” and “fill sand” are generally considered acceptable for use as “select engineered fill.” See exact project or jurisdiction for specifications.

The “pit-run gravel” should be free of any form of coating and any gravel or sand containing clay, loam or other deleterious materials should be rejected. No material oversize of the specified maximum sieve size should be tolerated. This material would typically have a fines content of less than 10%.

The materials above are also suitable for use as “general engineered fill.”

6.0 "STRUCTURAL ENGINEERED FILL"

Crushed gravel used as "structural engineered fill" should be hard, clean, well graded, crushed aggregate, free of organics, coal, clay lumps, coatings of clay, silt, and other deleterious materials. The aggregates should conform to the requirement when tested in accordance with ASTM C136 and C117. See exact project or jurisdiction for specifications. This material would typically have a fines content of less than 10%.

In addition to the above, further specification criteria identified below should be met:

"Structural Engineered Fill" – Additional Material Properties

Material Type	Percentage of Material Retained on 5 mm Sieve having Two or More Fractured Faces	Plasticity Index (<400 μm)	L.A. Abrasion Loss (percent Mass)
Various sized Crushed Gravels	See exact project or jurisdiction for specifications	See exact project or jurisdiction for specifications	See exact project or jurisdiction for specifications

Materials that meet the grading limits and material property criteria are also suitable for use as "select engineered fill."

7.0 DRAINAGE MATERIALS

"Coarse gravel" for drainage or weeping tile bedding should be free draining. Free-draining gravel or crushed rock generally containing no more than 5% fine-grained soil (particles passing No. 200 sieve) based on the fraction passing the 3/4-inch sieve or material with sand equivalent of at least 30.

"Coarse sand" for drainage should conform to the following grading limits:

"Coarse Sand" Drainage Material – Percent Passing by Weight

Sieve Size	Coarse Sand*
10 mm	100
5 mm	95 – 100
2.5 mm	80 – 100
1.25 mm	50 – 90
630 μm	25 – 65
315 μm	10 – 35
160 μm	2 – 10
80 μm	0 – 3

* From CSA A23.1-09, Table 10, "Grading Limits for Fine Aggregate", Class FA1

Note that the "coarse sand" above is also suitable for use as pipe bedding material. See exact project or jurisdiction for specifications.

8.0 BEDDING MATERIALS

The "Coarse Sand "gradation presented above in Section 7.0 is suitable for use as pipe bedding and as backfill within the pipe embedment zone, however see exact project or jurisdiction for specifications.

APPENDIX F

SPECTRAL ACCELERATION VALUES

2015 National Building Code Seismic Hazard Calculation

INFORMATION: Eastern Canada English (613) 995-5548 français (613) 995-0600 Facsimile (613) 992-8836
Western Canada English (250) 363-6500 Facsimile (250) 363-6565

September 26, 2017

Site: 68.3599 N, 133.7015 W User File Reference: Water Reservoir, Hidden Lake, Inuvik, NT

Requested by: ,

National Building Code ground motions: 2% probability of exceedance in 50 years (0.000404 per annum)

Sa(0.05)	Sa(0.1)	**Sa(0.2)**	Sa(0.3)	**Sa(0.5)**	**Sa(1.0)**	**Sa(2.0)**	**Sa(5.0)**	**Sa(10.0)**	**PGA (g)**	**PGV (m/s)**
0.184	0.267	**0.316**	0.288	**0.227**	**0.140**	**0.073**	**0.025**	**0.0096**	**0.149**	**0.152**

Notes. Spectral (Sa(T), where T is the period in seconds) and peak ground acceleration (PGA) values are given in units of g (9.81 m/s^2). Peak ground velocity is given in m/s. Values are for "firm ground" (NBCC 2015 Site Class C, average shear wave velocity 450 m/s). NBCC2015 and CSAS6-14 values are specified in **bold** font. Three additional periods are provided - their use is discussed in the NBCC2015 Commentary. Only 2 significant figures are to be used. ***These values have been interpolated from a 10-km-spaced grid of points. Depending on the gradient of the nearby points, values at this location calculated directly from the hazard program may vary. More than 95 percent of interpolated values are within 2 percent of the directly calculated values.***

Ground motions for other probabilities:

Probability of exceedance per annum	0.010	0.0021	0.001
Probability of exceedance in 50 years	40%	10%	5%
Sa(0.05)	0.023	0.071	0.112
Sa(0.1)	0.034	0.104	0.163
Sa(0.2)	0.047	0.130	0.197
Sa(0.3)	0.050	0.124	0.184
Sa(0.5)	0.043	0.102	0.147
Sa(1.0)	0.030	0.067	0.094
Sa(2.0)	0.016	0.036	0.050
Sa(5.0)	0.0051	0.012	0.017
Sa(10.0)	0.0022	0.0048	0.0065
PGA	0.020	0.059	0.091
PGV	0.028	0.068	0.099

References

National Building Code of Canada 2015 NRCC no. 56190;
Appendix C: Table C-3, Seismic Design Data for Selected Locations in Canada

User's Guide - NBC 2015, Structural Commentaries NRCC no. xxxxxx (in preparation)
Commentary J: Design for Seismic Effects

Geological Survey of Canada Open File 7893 Fifth Generation Seismic Hazard Model for Canada: Grid values of mean hazard to be used with the 2015 National Building Code of Canada

See the websites *www.EarthquakesCanada.ca* and *www.nationalcodes.ca* for more information

Aussi disponible en français

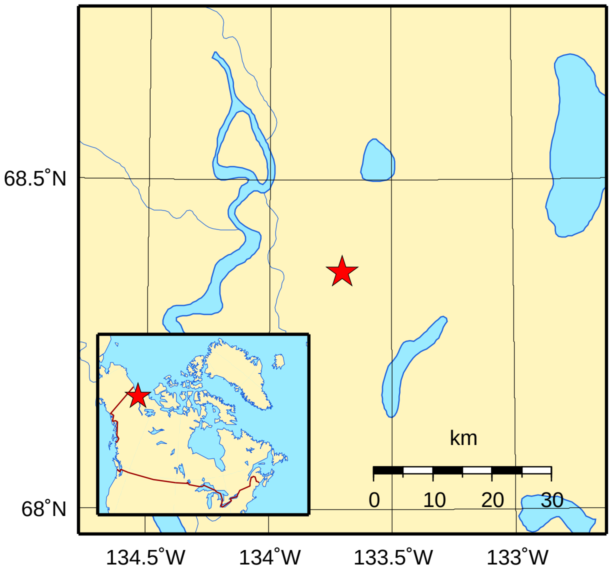

Natural Resources Canada   Ressources naturelles Canada

Canada

APPENDIX B

Site Visit Report

Inuvik

Site Visit Report

Prepared for:
Prepared for text

Prepared by:
Jaime Arenas and Suchit Kaila

November 5, 2017

Introduction:

Stantec conducted a site visit on September 25, 2017 and September 26, 2017 in order to conduct an assessment of the existing infrastructure and physical location to evaluate the installation a new potable water tank and associated piping.

The existing infrastructure includes two above ground potable water tanks and three buildings at the water reservoir site as indicated in Photo 1.

The existing electrical and control equipment was evaluated to confirm if there is enough capacity to support the installation of new potable water tank and related control and monitoring devices and identify any issues with the existing installation that may require an upgrade.

Photo1: Water Reservoir Tanks Area Layout

The Tank#1 is not in operation. However, the utility power meter and main distribution panel are located inside the Building#1 and they are still operative. Feeder cables from the main distribution panel are running to Building #2 to power all electrical equipment and control panels. Building #1 is currently being utilized as a maintenance storage room.

The Tank #2 is currently in operation and all piping, electrical, instrumentation, controls, and communications panels are installed inside the valve house Building #2.

Photo 2: Tank #1 and Bldg. #1	**Photo 3: Tank #2 and Bldg. #2**
	

Building #3 is not in service and it has been abandoned. The Town is planning to demolish and remove this structure in the near future.

Photo 4: Bldg. #3	**Photo 5: Bldg. #1 Structure – Tripping risk**
	

There is a control panel and a Schneider PLC located inside the Building #2 with some free digital and analog Inputs/Outputs available for future use. Space for additional PLC modules, if required, is available. This panel also has a UPS and Ethernet switch with capacity to support future connections.

Photo 6: Control Panel - Enclosure	**Photo 7: Control Panel - PLC**
	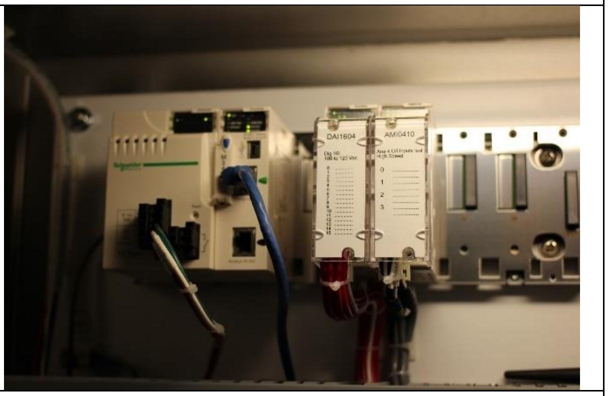

Photo 8: Control Panel - Ethernet Switch	**Photo 9: Control Panel - UPS**
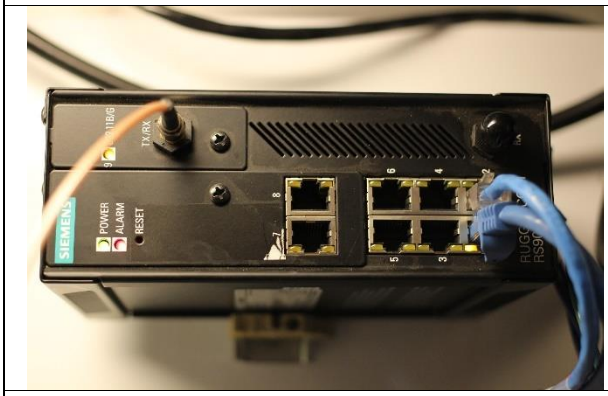	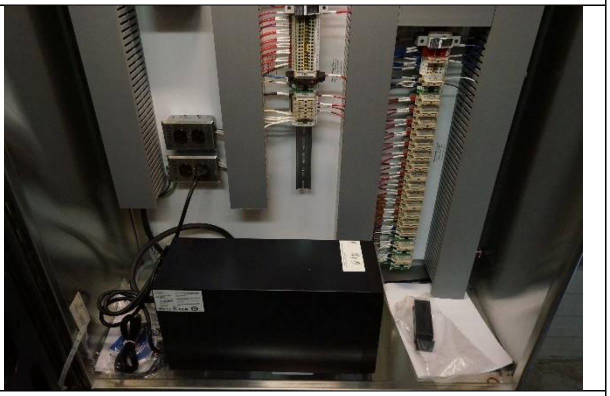

A communication panel with a telephone dialer and antenna is installed in the Building #2. This equipment is currently operational, but occasionally the communication signal gets interrupted. A test/assessment and upgrade may be required to improve the communication with the new control room at the water treatment plant. This may simply require relocating the antenna from Building #2 and installing it higher on the new potable water tank for better line of sight.

Photo 10: Communication Panel	**Photo 11: Communication Antenna**
	

The existing utility power transformers have sufficient capacity to support the necessary monitoring and control instruments for the new tank. If additional power is required, the upgrade of the power transformers will need to be coordinated with the utility. New utility distribution power lines are available adjacent to the buildings. The existing lighting panels have available space for new breakers for future installations.

Photo 12: Power Transformers	Photo 13: Lighting Panel
	

Some of the existing monitoring and control instruments located in building #2 are obsolete and not all instruments are connected to the PLC. An upgrade of these instruments may be required to allow communication with the main control room at the water treatment plant.

Photo 14: Temperature Monitoring	Photo 14: Analog Instrument
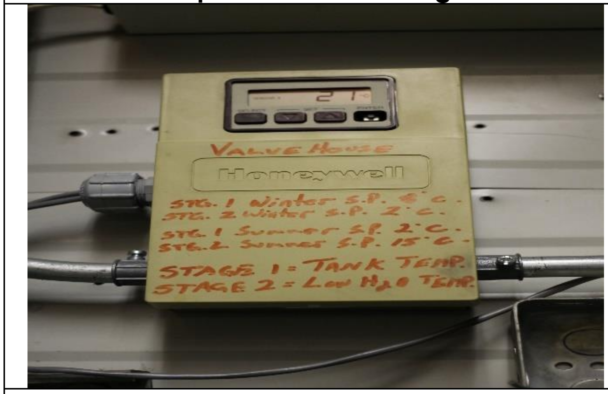	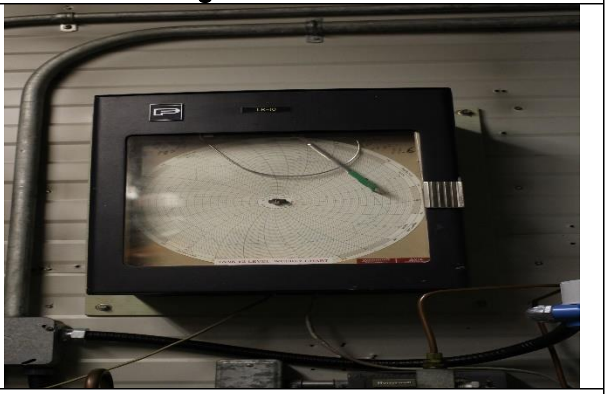

Photo 15: Analog Instrument	Photo 6: Digital Instrument
	

Photo 17: Control Room - SCADA

10:12:01 AM - 2017-09-26

DISTRIBUTION SETPOINTS

CCC Tank Control Levels

One Distribution Pump Start Level 2950.00 mm
Two Distribution Pumps Start Level 3050.00 mm
Three Distribution Pumps Start Level 4100.00 mm
Distribution Pumps Stop Level 2800.00 mm

Pressure Scenario Setpoints

Production Start Pressure 1000.00 kpa
Production Stop Pressure 830.00 kpa
Start Lag Timer 1.00 min
Stop Lag Timer 1.00 min

Valvehouse Tank Level Setpoints

Production Start Level 9.20 m
Production Stop Level 11.00 m

9182.00 mm

INFLOW TODAY 354.30 m³
INFLOW YESTERDAY 1385.47 m³
OUTFLOW TODAY 684.85 m³
OUTFLOW YESTERDAY 1455.59 m³

Additional notes for consideration by E&I based on discussions at site

1. Door intrusion alarm may need to be upgraded/replaced with feedback to the PLC
2. Consider replacing the chlorine analyzer with new analyzers that are certified for discharge in to the treated water system rather than draining to waste
3. The chlorine analyzer can be tied-in with the flow to monitor chlorine residual only when water is flowing through the system instead of continuous monitoring as installed currently
4. Consider providing temperature and fuel level feedback to the PLC
5. Temperature monitoring for the tank to be provided and used for controlling the water reheat system instead of continuous reheat system operation.

Process Mechanical

The existing piping and valves are in good operating condition. The piping in the Valve House (Building #2) is installed to facilitate tie-ins for the future potable water tank. The existing tie-in point for the 600mm fill/draw connection for the new potable water tank is in front of the building door. Using this tie-in point will create accessibility concerns within the building and will obstruct the entrance. The new potable water tank fill/draw will require a new tie-in point either on the east side or on the west side under the mechanical equipment platform.

The piping for the new potable water tank to be consistent with the existing piping and use the same butterfly valves with lever operator. The Town will provide the existing butterfly valve make and model to Stantec.

The existing reheat piping was modified by the Town and replaced with PVC pipes. The tie-in point for water reheat system to the new potable water tank is not available in the existing piping. The design should incorporate adding a tie-in point for the water reheat to the new tank.

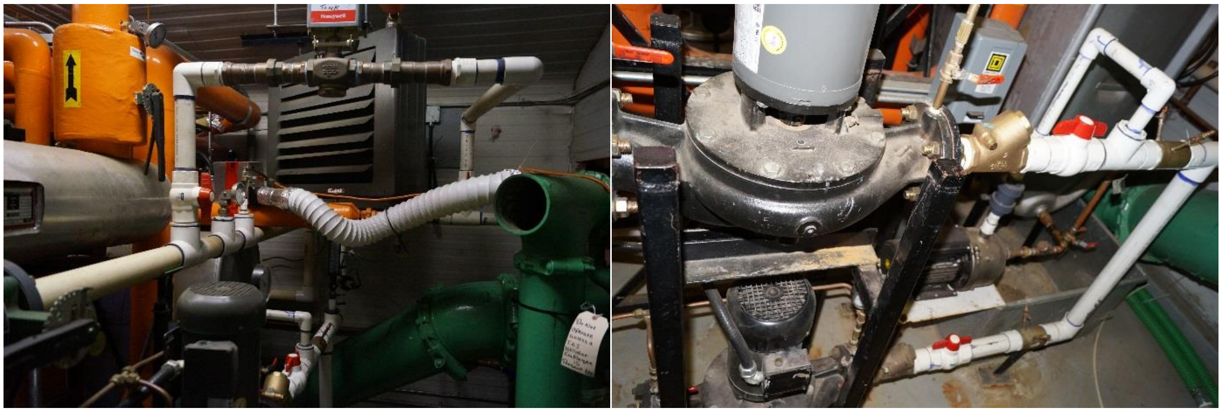

The Town indicated that the existing utilidor to the Valve House (Building #2) has experienced issues recently with freezing of pipes. The Town requested Stantec to consider rehabilitating the utilidor or replacing it with insulated pipes.

The Town requested to incorporate clearly visible signage to be painted on the new potable water tank.

APPENDIX C Site Selection Report

KAVIK-STANTEC INC.
Box 2320
Inuvik, NT, Canada X0E 0T0
Tel: (867) 777-4548
Fax: (867) 777-4925

To:	Rick Campbell	From:	Ken Johnson
	Town of Inuvik		Edmonton
File:	110126057	Date:	November 24, 2017

Reference: Inuvik Reservoir Addition – Geotechnical Design and Project Schedule

Introduction

As part of continuing water system improvements, the Town of Inuvik is planning to construct an additional potable water storage reservoir for the community. The existing water reservoir was constructed in 1976 with a volume of 2,270 cubic metres (500,000 imp Gal) and remains in reasonably good condition. A future reservoir was planned at the time adjacent to the reservoir that was constructed, and funding is now available to support this expansion.

An additional 2,270 cubic metre reservoir will provide Inuvik with operating flexibility for the water system and provide additional potable water storage and fire protection water storage.

The new water reservoir is proposed to be constructed adjacent to the existing reservoir tank facility at Hidden Lake in Inuvik, NT. The reservoir will be similar to the existing above-ground reservoir, with a proposed diameter of 15.5 m. The Inuvik reservoir will be supported on an insulated subgrade to protect the existing thaw sensitive permafrost, with consideration of the design criteria applied to the existing Inuvik reservoir, which was constructed on a ventilated pad.

Two possible sites, in close proximity to the existing reservoir, were proposed for the new reservoir, one site to the west of the existing reservoir, and the other site to the north of the existing reservoir. Both sites are presently treed. A geotechnical review included a desktop study, a detailed air photo review, mapping of surficial geology and geomorphology, and an intrusive site investigation. The site investigation included six boreholes, with the collection of soil samples, and subsequent soil laboratory testing. Ground temperature cables were installed in four of the boreholes to help define the geothermal conditions.

Ground Conditions

In general the ground conditions at the sites consist of peat, underlain by glacial material, consisting of clay, silt, sand and gravel till.

The till contains high ground ice contents and zones of massive ice with soil inclusions dispersed in an ice matrix. The medium to high plastic clay till has soil moisture contents ranging from about 12 to 115%, with an average of 47% at the north site and an average of 45% at the south site. The highest moisture contents measured on the south site were 63, 67, 82 and 115%, while the highest moisture contents on the north site were 52, 57, 101 and 107%. These soils would be expected to be thaw sensitive on melting, with excess ice contents of up to approximately 60 to 70%.

The silt till had an even greater variation in soil moisture content, ranging from about 34 to 219%, with an average of 98% at the north site and 151% at the south site. Since the very high moisture contents also tend to be associated with ice lensing and ice inclusions, these materials would be expected to be highly unstable on thawing, including the likelihood of pumping or liquefaction when disturbed.

The sand till (or sandy soils interspersed in ice layers), where present in the upper 2 to 5 metres of Boreholes 1, 3 and 4 of the north site, and both boreholes at the south site, is also associated with ice lensing, with the lowest soil moisture contents being 41 to 61percent, and higher moisture contents ranging from 203 to 369 percent. All of these layers would be considered highly thaw sensitive, with excess ice contents likely ranging from 35 to 355 percent.

The proposed water reservoir tank project is considered feasible at these two sites, with design measures to protect the tank foundation from the potential effects of thawing ice-rich permafrost. Based on the findings from the investigation of the two sites, and the similarities of the ground conditions, there is no preference for one site over the other. In consideration of this information, the proposed site to the west of the existing reservoir was selected for the new reservoir. This selection was based on the proximity of the existing connecting point to the utilidor system, and the existing configuration that is available for the piping connections.

The Inuvik area is experiencing rapid climate change. Air temperatures have increased more than 2.5 °C since 1970. Near-surface ground temperatures have risen from -3° to -4° C in the 1960s to -1.5° to -3° C in the 2000s. Recent measurements in Inuvik are now showing ground temperatures warmer than -1°C, with a range of about -0.6° C to -0.3° C at a depth of about 5 m in the main townsite and lowland areas, respectively, and only slightly cooler at -0.6° C at a depth of 11 metres in the lowlands. The thickness of the active layer has also increased in this time frame.

Existing Storage Tank and Foundation System

The foundation system for the existing storage tank appears to have performed reasonably well over the past 40 years. No major problems have been noted in any construction records or other available documentation. Based on the construction records, the 2.1 metre fill pad was constructed as follows:

- A base fill of 1120 mm (44 inches) consisting of silty gravel was placed, with the sideslopes at 2H:1V. This material is probably consistent with the pitrun gravel typically seen in Inuvik in the present day. This material has a fines content in the order of 25%;
- A 40 mm (1.5 inches) thick sand cushion was then placed over the base fill, with a polyethylene vapour barrier placed on top, followed by 75 mm (3 inches) of Styrofoam insulation and another 50 mm (2 inches) of sand;
- A series of 460 mm (18 inch) diameter, 14 gauge, galvanized metal culverts were then placed on the sand at 1067 mm (42 inches) on centre, and backfilled with a total thickness of 560 mm (22 inches) of crushed rock fill, followed by another 75 mm of insulation;

- Finally, a 150 mm (6 inch) thick layer of crushed rock fill was placed, topped by a 50 mm (2 inch) thick layer of fine crushed rock surfacing, which extended down the sideslopes of the fill pad.

Although the existing water reservoir tank is understood to have performed adequately over its 39-year life, the ongoing influence of climate change means that the design of any new structure will need to take into account the likelihood of continued warming of the permafrost. This is particularly critical in areas that are thaw sensitive and contain large ice formations, which are the conditions at the proposed site. There is also a potential for thaw settlement deformations under the existing reservoir foundation due to long-term ground warming.

Foundation Systems to Support Tank in Response to Ground Conditions

A welded steel water reservoir design is under consideration for the new reservoir because it is an appropriately robust structure for a long-lasting water retaining vessel. The structure has some, limited flexibility, and therefore can accommodate some differential ground movement, however, this movement should be limited to less than 15 millimetres. Given the identified subsurface conditions influenced by thaw sensitive, ice-rich permafrost, a very robust foundation system is needed.

For the characteristics of the water reservoir, the geotechnical report recommends the use of a thermosyphon stabilized foundation pad as the most technically appropriate method of providing a tank foundation that will be stable throughout the intended service life. Of particular importance to this recommendation is that local evidence clearly indicates that the ground temperatures in Inuvik are warming, which will negatively influence the thaw sensitive permafrost at the new reservoir site.

There is however, local and regional evidence that thermosyphons may have issues and may not be an appropriate solution by themselves. For example, in Inuvik, there have been issues with thermosyphon systems at the Young Offenders facility, the Swimming pool, and the Hospital. On a regional scale, the thermosyphon system associated with the Recreational Facility in Dawson City. We understand that the issues with the Young Offenders and the Dawson City arena are both design/constution issues, associated with vertical undulations in the thermosyphon piping. Stantec is not aware of the issues are for the Rec Centre and Hospital, but these facilities have horizontal loop systems. For the water tank, Stantec is proposing to use battered or vertical thermosyphons, which have a much better performance record as demonstrated by the their successful 40 year performance on the Trans Alaska Pipeline.

In consideration of these issues and in consideration of the performance of the foundation system for the existing water reservoir, Stantec is proposing to advance the design of an adaptive foundation system, which has inherent contingencies to respond incrementally to climate change influences. The starting point for the adaptive system will be the proposed foundation system presented in the geotechnical report (see following figure).

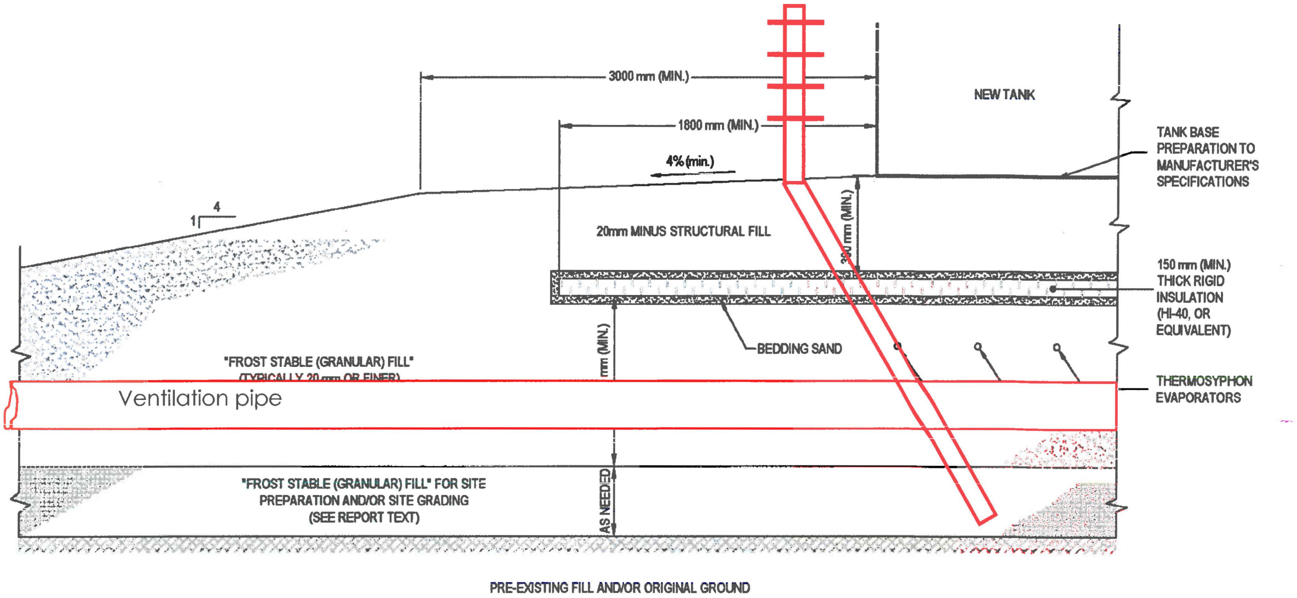

As noted in the recommended foundation system, granular fill provides the fundamental element of the foundation system. Supplementing the granular fill are an insulation element and a thermosyphon element. The figure shows the installation of a "battered thermosyphon" installed around the perimeter the tank.

Stantec is proposing an adaptive design with 2 to 3 contingencies that allow for incremental increases in the freeze protection of the existing ground. The first element will be a vented foundation, similar to the foundation for the existing reservoir. A vented engineered pad foundation may be passive or active. The passive system would rely on natural ventilation during the winter months to cool the foundation, and would be closed off to outside air during the summer months. The active system would employ a fan or some similar technology to actively cool the foundation during the winter months and would be closed off to outside air during the summer months. The second element of the adaptive design would be the thermosyphon system, which could be partially installed and not "activated" until the thermal conditions in the foundation system warranted the additional cooling.

The battered thermosyphons shown in the drawing could be installed during the current construction, but not activated, or could be installed at the time when the thermal conditions in the foundation system warrant the additional cooling. Monitoring of the temperature within the foundation and the ground below it will be the indicator of "if and when" the thermosyphons are needed.

Schedule and Construction Methodologies

With the existing ground conditions and the proposed adaptive design, the construction schedule becomes particularly important to the long-term performance of the adaptive design. In order to maximize the thermal baseline starting point for the adaptive design, it is necessary to advance a construction schedule that extends over a least one winter. By doing this, the adaptive design will be allowed to reach an equilibrium under the influence of cold temperatures.

Construction methodologies will also influence the opportunity to optimize the adaptive design. These construction methodologies should address:

- Disturbance of the existing in situ peat material
- Other ground disturbances during construction.
- Execution of any ground disturbance

Recommendation

Based upon the information presented in this memo Stantec is proposing that the design of the new reservoir proceed for the site to the west of the existing reservoir, and employ an adaptive design in consideration of the ground conditions and the performance of the foundation system on the existing reservoir. In order to maximize the long term performance of the adaptive design, the construction should proceed with a schedule that will accommodate one winter of cooling (project completion in the 2019), and the construction methodologies should address ground disturbances that may altern the existing ground thermal conditions.

If you have any questions regarding the information in this memo, please contact the undersigned.

Kavik Stantec

Ken Johnson, M.A.Sc., RPP, P.Eng.
Project Manager
Senior Environmental Planner and Engineer
Phone: (780) 984-9085
Kenneth.Johnson@stantec.com

Attachment: Final Geotechnical Report

APPENDIX D Foundation Design Report

Stantec

Memo

To:	Ken Johnson	From:	Jim Oswell
cc:	Chris McGrath		
File:	110126057	Date:	January 19, 2018

Reference: **Inuvik water reservoir – foundation design**

INTRODUCTION

Stantec is designing a new water reservoir in Inuvik, NT. It will be an above-ground tank, placed on an engineered granular pad. This memo provides design guidance for the engineering embankment and design mitigations to address permafrost stability.

There is an existing water reservoir at the site. The foundation for this water reservoir incorporates a passive ventilation system consisting of 457 mm (18") diameter corrugated metal pipes embedded into a engineered granular fill pad. Details on the performance of this structure and foundation are provided below. The Town Inuvik desires that a similar foundation structure be used for the new water reservoir.

The reservoir will be an insulated steel tank approximately 15 m in diameter and a capacity of approximately 2270 m^3. Two areas were initially considered for the location of the new reservoir; it is understood that the Town of Invuik has chosen the "south" site as the preferred location.

GEOTECHNICAL PROPERTIES

NEHTRUH-EBA Consulting Ltd. (2017) undertook a geotechnical investigation at two sites in the vicinity of the existing reservoir, one site being nominally to the "north" and one site being nominally to the "south" of the existing reservoir. The subsurface conditions at both sites were generally similar; as the "south" site has been selected for the new reservoir, the subsurface conditions at that site will be described herein.

As part of the site investigation two boreholes were drilled at the south site (while four boreholes were drilled at the "north" site). The depth of the boreholes were 18.0 am and 18.3 m. The generalized stratigraphy consisted of a thin layer of surficial organics (peat) underlain by sand or clay or silt till to the full depth of the boreholes. Ice, either as discrete crystals or inclusion or massive lenses was encountered in the upper 6 m in both boreholes. Water contents of the soils exceeded 500% in some samples. The soils are considered ice-rich (excess water on thawing of the frozen soil) for the entire depth of the boreholes.

Pore water salinities may be taken as 5 PPT, representing a freeze-point depression of 0.3°C.

Table 1 presents the generalized soil stratigraphy and the simplified stratigraphy used for the geothermal modelling. Of note is the absence of the ice layers in the geothermal model stratigraphy. Thawing progresses faster/deeper into soils with lower water contents compared to

Table 1. Generalized soil stratigraphy encountered and simplified for geothermal modeling.

	Generalized soil stratigraphy		Simplified soil stratigraphy for geothermal model	
Depth to top of stratum (m)	Soil	Water content (%)	Soil	Water content (%)
0	Peat	300	Fine sand or silty Till	30
0.1	Fine sand or silty Till	50	Fine sand or silty Till	30
1.5	Ice and soil	300	Fine sand or silty Till	30
3.5	Clay, silty (60%clay sizes; 30% silt sizes; 10% sand)	60	Clay, silty	30
4.0	Silt, some gravel and fines (70% Fines; 13% Sand, 17% Gravel)	80	Clay, silty	30
5.0	Ice and soil	300	Fine sand or silty Till	30
5.0	Clay, silty (60%clay sizes; 25% silt sizes; 15% sand)	45	Clay, silty	30
10 to 18.5	Clay, silty (60%clay sizes; 25% silt sizes; 15% sand)	25	Clay, silty	30

soils with high water content. Thus, using materials of lower water content is generally conservative from a thaw assessment perspective. Preliminary modeling showed that seasonal thaw would not reach the depth of the ice and therefore would not be impacted by the operation of the water reservoir placed on a 2.1 m thick granular pad.

Nehtruh-EBA provided ground temperature from two boreholes at the "south" site and two boreholes at the "north" site. The ground temperatures, recorded about one month after installation of the thermistor cables and taken in mid-September 2017 likely represent the warmest period. Figure 1 presents these ground temperatures data. The mean annual ground temperature is inferred to be -2°C. Also shown on the figure is the top of the observed discrete ice layer, where present. It is seen that the ice layers represent a thermal barrier to seasonal thawing.

Other literature and reports suggest typical mean annual ground temperatures should range from -1°C to -5°C depending on the location, ground cover and surface disturbance; however more recent literature suggests ground temperature are presently warmer than historical "normal" values. Burn and Kokelj (2009) reported that ground temperatures in some areas of the Mackenzie Delta are presently 2.5°C warmer than in 1970.

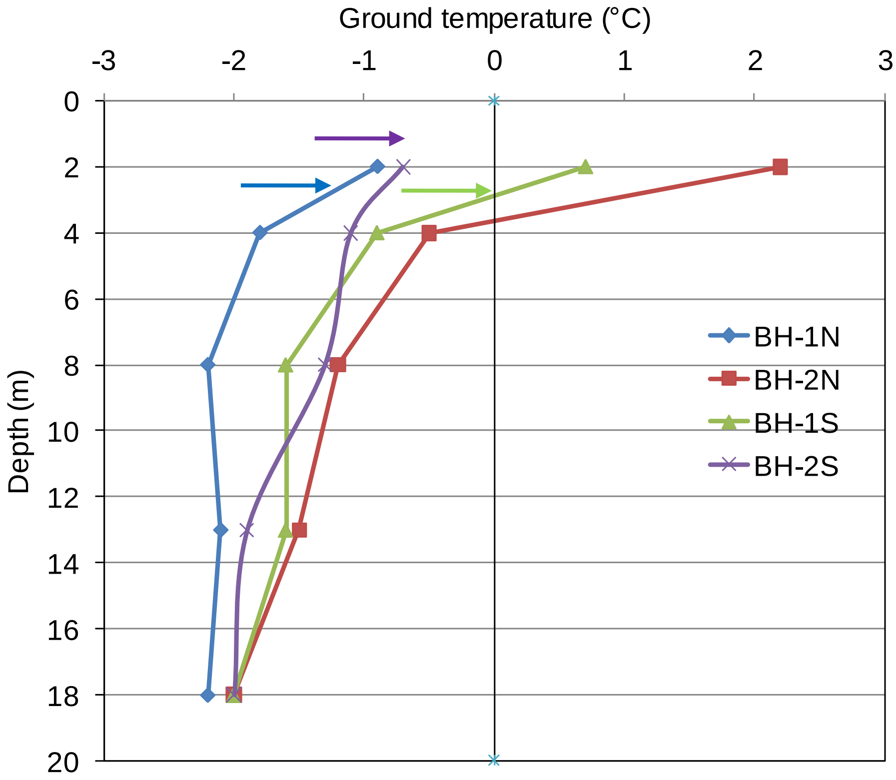

Figure 1. **Ground temperature data at Inuvik reservoir site ("N" denotes north site; "S" denotes south site). The coloured arrows denote the observed top of ice within the respective boreholes, where present (no discrete ice lens was observed in BH-2N).**

CLIMATE DATA

The Environment Canada climate data was used to determine the mean annual air temperature and the historical climate warming trend. Figure 2 presents the mean annual air temperatures for the period 1980 to 2016. The estimated 30-year mean annual air temperature for these data to 2016 is -7.5°C. The published Environment Canada mean annual air temperature for the period 1981 to 2010 is -8.2°C.

Climate warming for the period 1980 to 2016 is estimated to be 0.09°C/year. See Figure 2. This value will be applied as the future climate warming rate over the life of the new water reservoir.

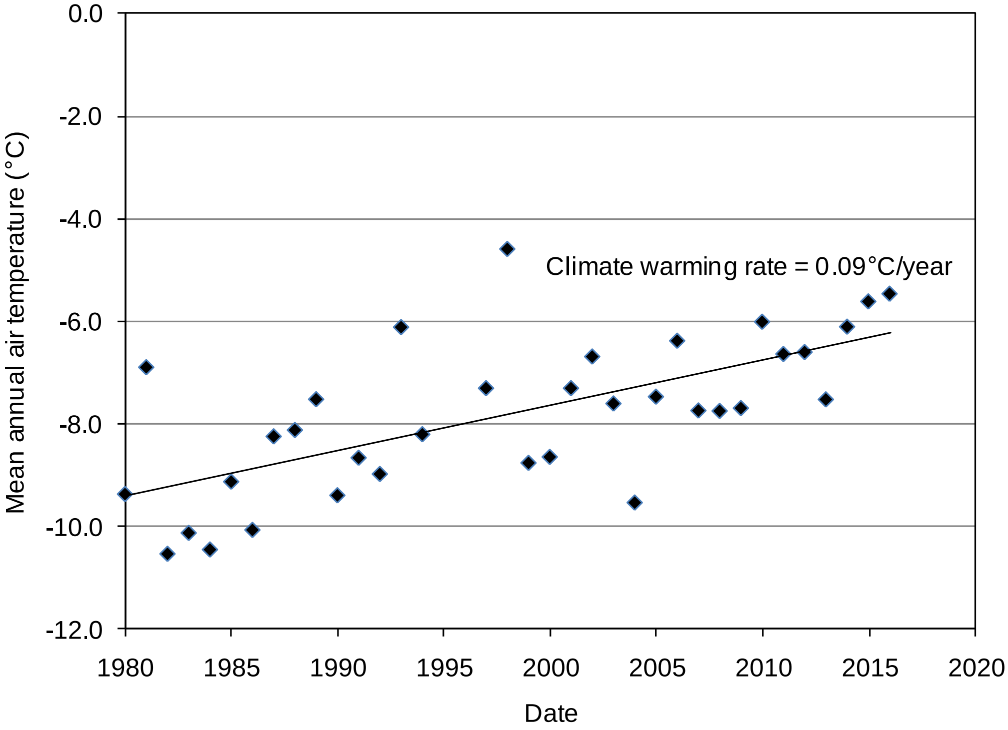

Figure 2. **Mean annual air temperatures for Inuvik for the period 1980 to 2016.**

FOUNDATION DESIGN

The foundation design for the reservoir will consider several aspects. These are:

- Analysis of an insulated, passive ventilated engineered granular pad.
- Adapted design strategies to allow mitigations to be applied to address future climate warming or permafrost degradation impacts.

Accounting for Climate Warming

CSA (2010) recommends that new structures consider the impact of climate change (warming) on foundation design and performance. To address this need, several actions were included in the design process:

1. Climate warming: The geothermal be incorporated into the. This climate warming rate is based on a linear projection of historical air temperature data for the past 35 years. Over the next 30 years, the air temperature is estimated to rise about 2.7°C.
   Based on climate circulation models, the Climate Adaptation report (CSA, 2010) notes that the western Arctic region will experience approximately 2.0°C for the next 30 years (2018 to 2047). Alternatively, the SNAP database (UAF, 2018) predicts air temperature warming in Inuvik to be 1.5°C over the next 30 years.
   The use of forward casting of historical data provides the most conservative approach to climate warming.

2. Adaptive design: To address the potential for undesirable permafrost degradation under the reservoir foundation, several adaptive strategies are discussed in this report. Adaptive strategies are design details that are incorporated into the construction of the structure that can be used in the future to facilitate the retrofitting or implementation of mitigation. By incorporating these strategies as part of initial construction, future capital costs and interruptions of operation may be reduced.

Existing Reservoir Foundation Design

Based on the construction records and as reported by Nehtruh-EBA (2017), the foundation pad for the existing 1978 water reservoir was constructed as follows:

- A base fill of 1118 mm (44 inches) consisting of silty gravel was placed, with the sideslopes at 2H:1V. This material is probably consistent with the pitrun gravel typically seen in Inuvik in the present day, which has a fines content on the order of 25%;
- A 38 mm (1.5 inches) sand cushion was then placed, with a polyethylene vapour barrier placed on top, followed by 75 mm (3 inches) of extruded polystryene insulation and an additional 50 mm (2 inches) of sand;
- A series of 457 mm (18 inch) diameter, 14 gauge, galvanized metal culverts placed on the sand at 1067 mm (42 inches) on centre, and backfilled with a total thickness of 560 mm (22 inches) of crushed rock fill, followed by another 75 mm of insulation;
- Finally, a 150 mm (6 inch) thick layer of crushed rock fill was placed, topped by a 50 mm (2 inch) thick layer of fine crushed rock surfacing, which extended down the sideslopes of the fill pad.

The total design fill thickness was thus about 2121 mm (or 2.1 m), according to the construction records.

Staff from the Town of Inuvik state that the overall performance of the existing water reservoir has been good. Some minor settlement has been observed and some of the passive ventilation ducts have experienced bending, such suggests mid-span settlement. Photographs of the ventilation ducts from late summer 2017 show some ducts with covers and other that are open. It is not known if the Town is actively installing the duct covers in spring and removing them in fall, as would be normal and expected operating procedure.

The reported good performance of the foundation for the existing reservoir is likely due to the lack of thermal degradation of the subgrade. This lack of thaw, typically reflected by an increase in the thickness of the seasonal active layer is likely attributed to the very high ice-content of the soils and the presence of a thick ice layer immediately below the active layer. The presence of this ice layer severely impedes the progression of the thaw front into the subgrade. While thawing of the permafrost soils may not have occurred in recent decades, ground warming toward the freezing point can take place, resulting in increased creep settlement of the icy subgrade soils. Creep settlement may be a factor in the reported deformation of some of the existing ventilation ducts.

It is understood that the proposed water reservoir structure will be the same design as the existing facility. The 2270 m^3 tank will be constructed on a 2.1 m thick engineered embankment, into which two layers of insulation and 457 mm corrugated metal conduits are installed. The engineered fill embankment will comprise crushed gravel, typically 20 mm minus, well-graded with less than 10 percent fines.

The new water reservoir is estimated to be 15 m (edge to edge) from the existing reservoir.

Geothermal Model Set-up and Model Scenarios

Matrix Solutions Inc., using the commercial geothermal software TEMP/W, created by Geo-Slope International Ltd., undertook the geothermal modeling of the proposed water reservoir structure and subgrade. The TEMP/W model is a finite element program designed to solve complex heat-transfer problems including phase change, and incorporates both conductive and convective heat transfer. The surface boundary conditions incorporated a user specified surface energy balance to model the effects of seasonal air temperature, wind, albedo, and snow cover.

Figure 3 present the finite-element grid for the problem. The model is set-up in two dimensions with the model domain centred on the vertical axis of the tank. The grid extended 46 m from the centre of the tank and over 25 m vertically. The subsurface conditions are summarized in Table 1. The baseline conditions were simulated for 10 years, and then the water reservoir and engineered embankment were instantaneously applied in the fall of year 10. The water reservoir was assumed to have a fixed annual temperature of +5°C. Passive ventilation ducts were buried in the embankment, similar to the existing reservoir. Two layers of rigid polystyrene insulation were also installed in the embankment.

The surface energy parameters, notably the thermal conductivity of the snow was adjusted to achieve baseline conditions reflecting the current thermal regime, which were a mean annual ground temperature of about -2°C and an active layer depth of about 1.4 m.

The wind speed through the ventilation ducts was set at 5% of the mean wind speed as reported by Environment Canada, climate normals.

The geothermal scenarios considered for this project included the following:

- Ventilation ducts open all-year round; no climate warming
- Ventilation ducts closed all-year round; no climate warming
- Ventilation ducts open in winter and closed in summer; no climate warming
- Ventilation ducts open all-year round; climate warming applied

Although the design concept for this project is that Town of Inuvik staff will actively maintain the ventilation system, cleaning the ducts of debris and removing covers in fall and installing covers in spring, as a design exercise, it was appropriate to consider potential non-compliance by maintenance staff and the impact on the geothermal regime.

Reference: Inuvik water reservoir – foundation design

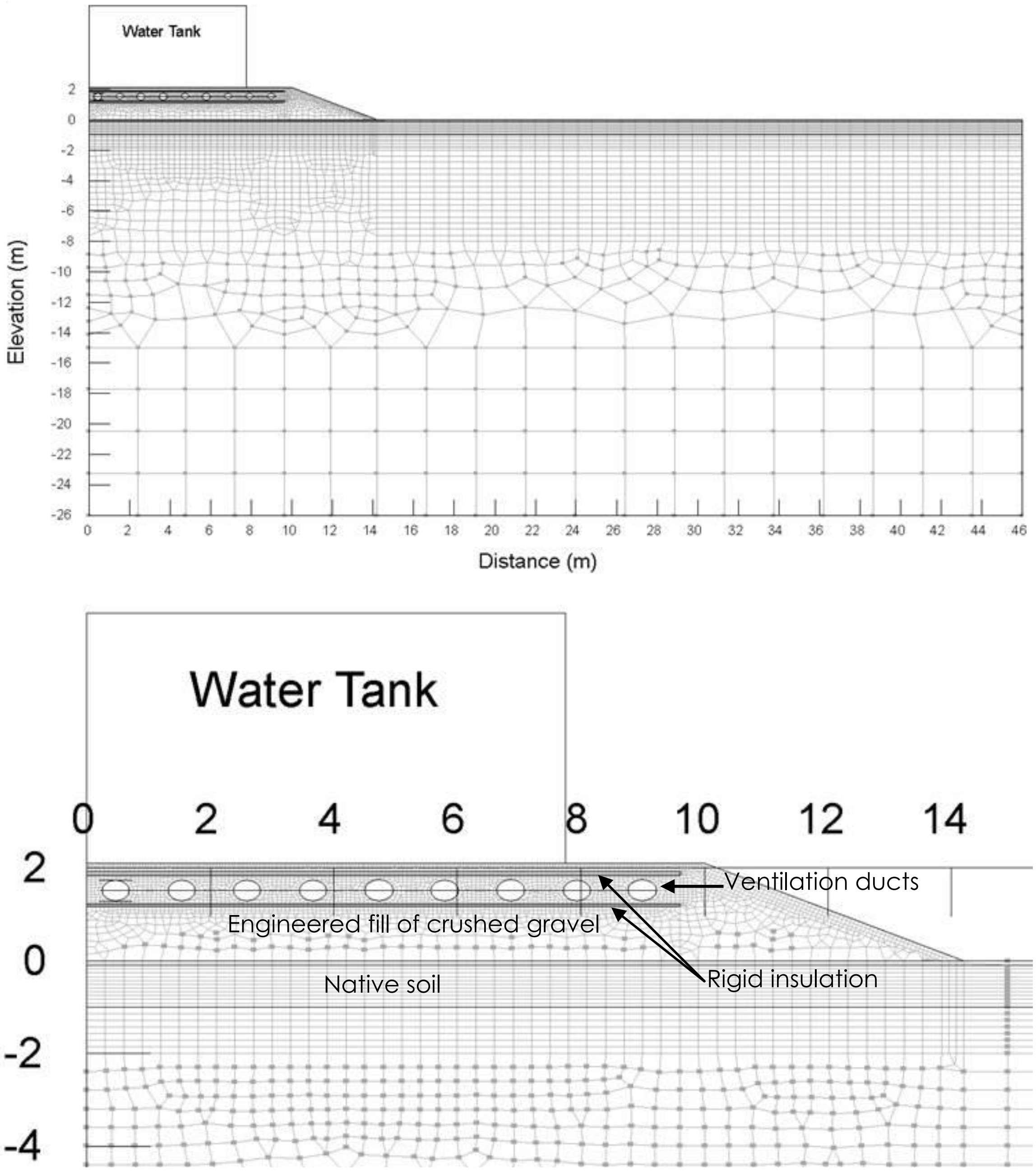

Figure 3. Finite element grid used for the geothermal model. Top shows the entire domain, and bottom shows the domain in the area of the water tank. Distances are in meters.

Geothermal Modeling Results

Ventilation ducts open all-year round; no climate warming

Figure 4 presents the model results with ground temperatures shown after nearly 10 years of operation. The thermal regime has reached steady state after about one or two years of operation and no thermal regime changes occur. The thermal regime under the tank is shown to actually cool from initial baseline conditions. The ground temperature at about 1 m to 5.5 m within the native soils cools from an initial temperature of about -2°C to about -3°C. Seasonal thawing is confined to within the engineered gravel pad.

Ventilation ducts closed all-year round; no climate warming

Figure 5 presents the model results with ground temperatures shown after nearly 10 years of operation. The thermal regime has reached steady state after several years of operation. In response to the lack of winter cooling from the closed ventilation ducts, the warm water within the reservoir induces thawing through the engineered fill embankment and into the native subgrade, as displayed by the deepening of the 0°C isotherm. The thermal regime under the centre of the reservoir warms above from initial baseline conditions. The 0°C isotherm rises near the reservoir edge

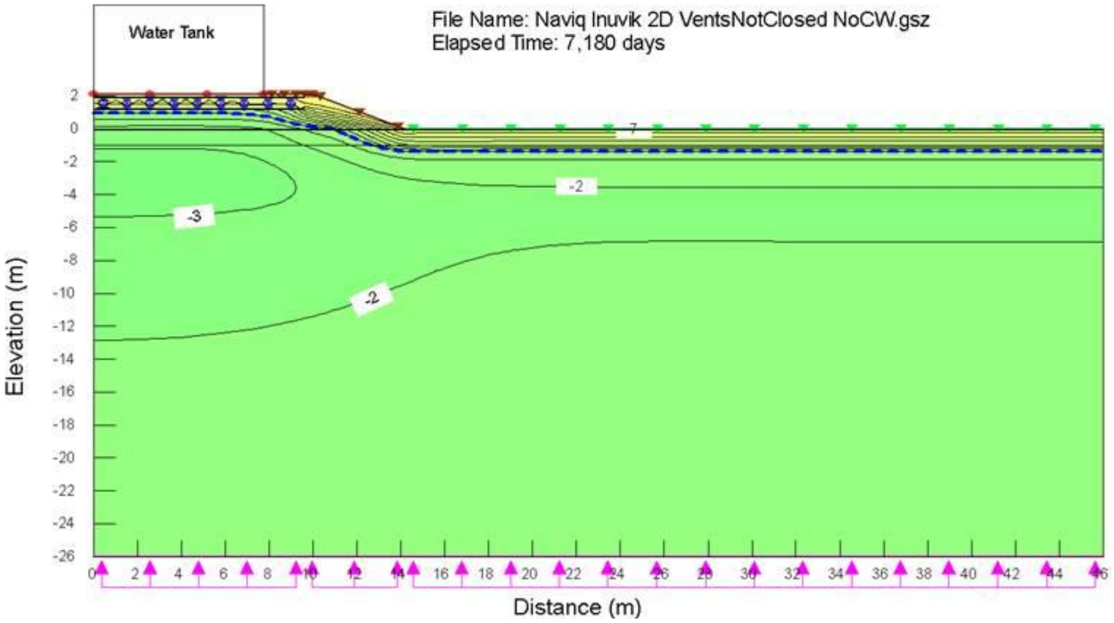

Figure 4. Ground temperature regime for scenario where ventilation ducts are open all year. No climate warming is applied. Ground temperature isotherms shown are typical of late summer. The blue dashed line represents the 0°C isotherm.

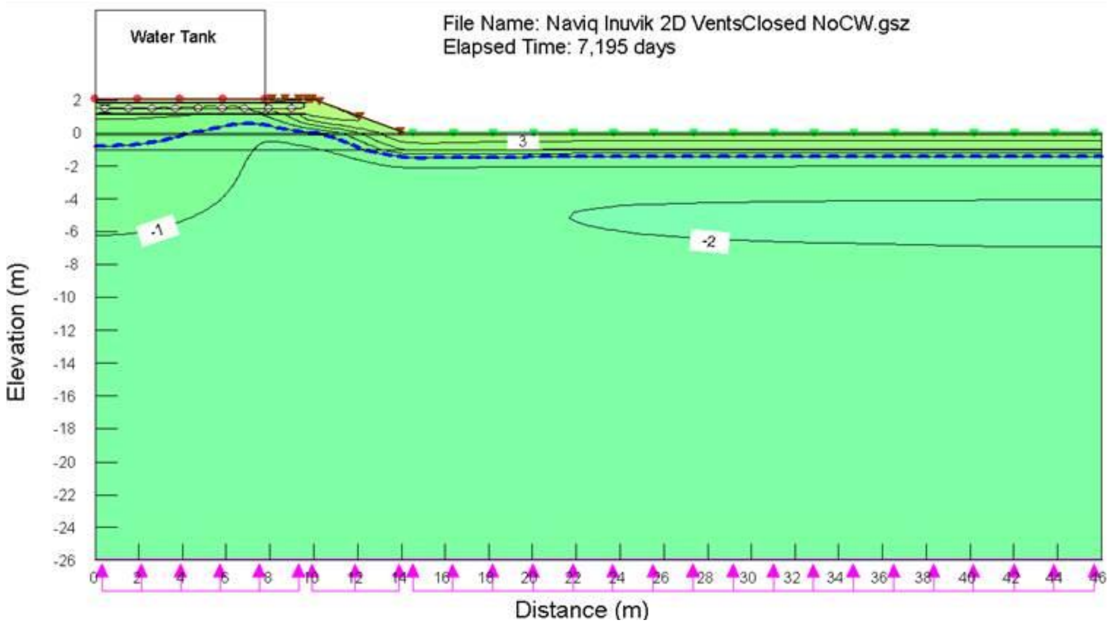

Figure 5. Ground temperature regime for scenario where ventilation ducts are closed all year. No climate warming is applied. Ground temperature isotherms shown are typical of late summer. The blue dashed line represents the 0°C isotherm.

due to the atmospheric influence.

The geothermal results show the effect of poor operational maintenance of the ventilation ducts. If the ventilation ducts are left closed, or blocked with debris or snow/ice, then long-term warming of the subgrade will result.

<u>Ventilation ducts open in winter and closed in summer (design case); no climate warming</u>

Figure 6 presents the model results with ground temperatures shown after nearly 10 years of operation. Again, the thermal regime reached a steady state after a few years and remains static thereafter. The ground temperatures experience cooling from initial baseline conditions, with the area under the tank cooling to about -4°C. Seasonal thawing is confined to the top of the lower insulation layer.

This scenario represents the design case (ignoring climate warming). It is seen that proper maintenance and operation of the ventilation ducts improves the geothermal conditions in the subgrade. Improper operation, particularly closing the ventilation ducts for the full year would be more detrimental than leaving the ventilation ducts open all year.

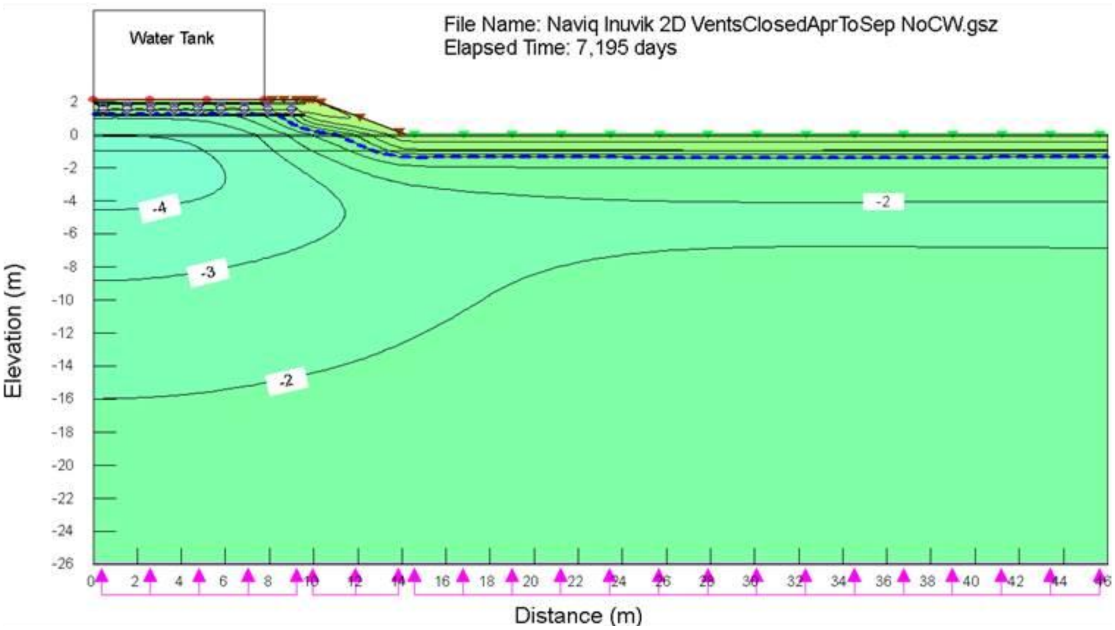

Figure 6. Ground temperature regime for scenario where ventilation ducts are open in winter and closed in summer. No climate warming is applied. Ground temperature isotherms shown are typical of late summer. The blue dashed line represents the 0°C isotherm.

<u>Ventilation ducts open all-year round; climate warming applied</u>

Based on the above results for no climate warming, the scenario wherein the ventilation ducts are open all-year was considered in light of climate warming, equal to 0.09°C/per year. The results of this model scenario will be conservative (resulting in deeper seasonal thawing and warmer ground temperatures) compared to the design case where the ventilation ducts are operated seasonally.

Figure 7 presents the geothermal results for this scenario. Given the long-term transient nature of the problem with the air temperature increasing every year, no steady state thermal regime is established. The results shown in Figure 7 correspond to approximately 30 years after start up. It is seen that the active layer remote from the water reservoir has increased to more than 2 m below ground surface, compared to the non-climate warming case of 1.4 m. Under the water reservoir, the seasonal thawing initially reduces for the first approximately five years and thereafter slowly deepens as the effects of climate warming continue. After approximately 29 years of operation, the seasonal thaw under the centre of the water reservoir is approaching the base of the engineered fill embankment.

For the case of a ventilation system operated as intended, the geothermal results will be better than shown on Figure 7.

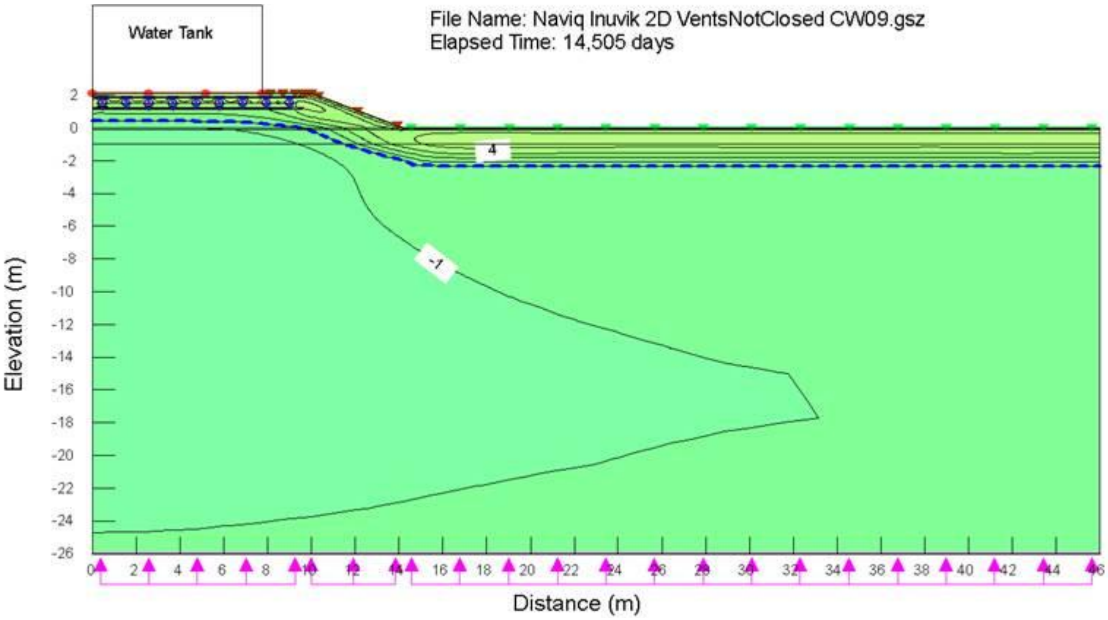

Figure 7. Ground temperature regime for scenario where ventilation ducts are open all year round. Climate warming of 0.09°C/year is applied. Ground temperature isotherms shown are typical of late summer, after approximately 30 years of operation. The blue dashed line represents the 0°C isotherm.

Long-term Creep Settlement of Water Reservoir

Although the preceding geothermal modeling indicates that melting of the ice-rich permafrost is not likely to develop, creep settlement of the structure may occur. This subsection estimates the creep settlement that could develop within the native soils as a result of the placement of the water reservoir and granular embankment.

Creep settlement was estimated using cavity expansion theory as discussed by Andersland and Ladanyi (1994). This is considered a conservative approach. For current ground temperature conditions ($T_g \approx -2°C$) and assuming ice-rich soils or pure ice, the long-term creep settlement may be in the order of 0.2 m. In the long-term, with the effects of climate warming, the mean ground temperature may rise to about $T_g \approx -0.5°C$ under the reservoir. The resulting creep settlement for these warmer ground temperatures would be exacerbated compared to current conditions. The creep settlement in this latter case may exceed 0.4 m.

New Reservoir Foundation Design

For the foundation of the propose water reservoir, the design should comprise the following elements:

- A base fill of approximately 1100 mm consisting of 20 mm minus gravel with a fines content of less than 10%. The side slopes of the embankment should be 2H:1V.
- A 38 mm to 50 mm layer of sand is installed with a polyethylene vapour barrier placed on top, followed by 75 mm of extruded polystryene insulation and an additional 50 mm layer of sand;
- A series of 457 mm diameter, 14 gauge, galvanized metal culverts are placed on the sand at approximately 1100 mm on centre. The culverts should be embedded in 20 mm minus gravel with a fines content of less than 10% with a total thickness of 550 mm.
- A layer of bedding sand, 38 mm to 50 mm thick is placed over the gravel layer. A suitable geotextile may be recommended to limit migration of the sand into the underlying gravel layer.
- An second layer of 75 mm thick extruded polystyrene insulation is placed on the sand. A 50 mm sand cover is placed over the upper insulation.
- A 100 mm thick layer of 20 mm minus gravel is placed over the sand and topped by a 100 mm thick layer of 50 mm minus gravel surfacing, which extended down the sideslopes of the fill pad.

The total thickness of the embankment is 2100 mm to 2150 mm. The crest engineered embankment should extend laterally at least 2 m from the exterior edge of the reservoir. Figure 8 presents a conceptual sketch of the engineered embankment foundation.

All fill materials should comprise well-graded granular sols with less than 10 percent fines (particles smaller than 0.08 mm). All fill should be placed in thin lifts and compacted to at least 100% of Standard Proctor maximum dry density at a water content ±1% of optimum.

The engineered embankment may constructed directly over the native subgrade and organic mat, providing all trees, stumps and root-balls are removed. If desired, a suitable geotextile may be placed over the native subgrade to provide separation between the subgrade and engineered fill. No fill materials should be placed in freezing temperatures nor when contaminated by snow or ice.

The engineered embankment, as described herein will have an allowable bearing capacity of 200 kPa.

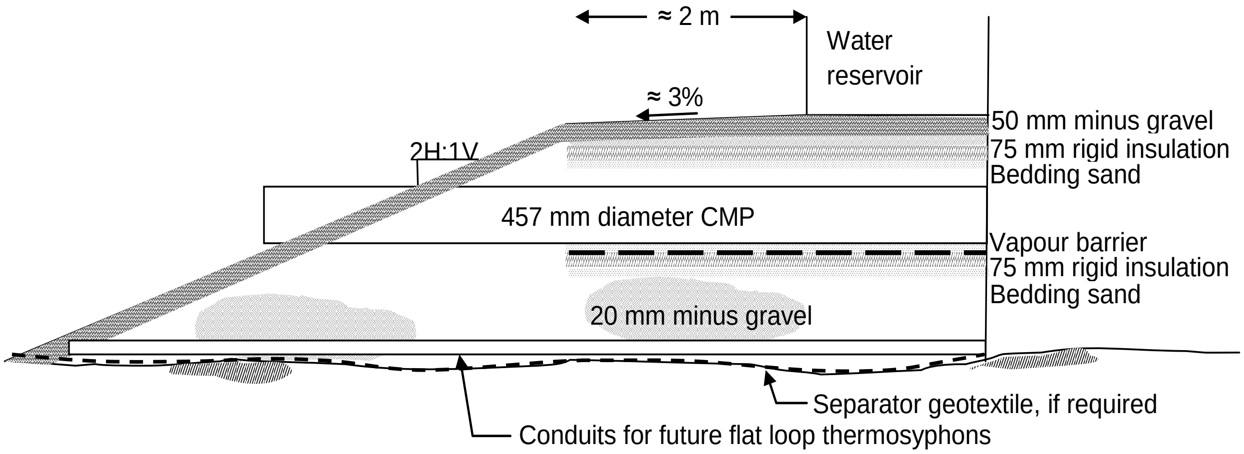

Figure 8. Conceptual sketch of reservoir foundation cross-section. Not all components are shown. Not to scale.

Reference: Inuvik water reservoir – foundation design

Additional comments regarding foundation design and construction in the NEHTRUH-EBA Consulting Ltd. (2017) report should be adhered to. Such comments include, but are not limited to, suitable insulation compressive strength, seismic conditions, and construction and post-construction monitoring.

The ventilation ducts should be orientated to the prevailing winter winds. Figure 9 presents the winter wind rosette for the Inuvik airport. This diagram shows that during winter, winds most often blow in the west – east direction. Thus, the ventilation ducts would be most effective when orientated west-east. The culverts should extend a suitable distance from the edges of the engineered embankment so that embankment materials do not slough or fall into the ducts.

The steel grade of the culverts should be appropriate for the applied loads.

Regular maintenance of the ventilation ducts is important to the long-term successful performance of this foundation. The ducts should be closed in spring when the daily air temperature consistently rises above freezing and should be opened in fall when the daily air temperature consistently falls below freezing. The ducts should be cleaned of all debris to allow free flow of air. Grasses and shrubs should not be allowed to grow around the ventilation duct openings as this will reduce air flow.

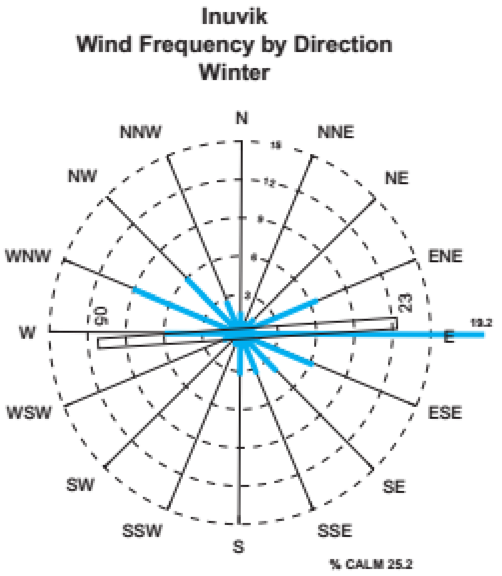

Figure 9. Winter wind rosette for Inuvik airport (Klock, Hudson, Aihoshi, and Mullock, 2001).

Ground Temperature Monitoring

An important aspect of foundation design is the monitoring of long-term performance. It is recommended that the existing thermistor cables installed by Nehtruh-EBA as part of the 2017 geotechnical investigation be maintained and monitored during the life of the project.

In addition, two multi-bead thermistor cables should be installed horizontally on the native ground surface prior to construction of the engineered foundation pad. To reduce the possibility of damage to the thermistor cables, a small diameter metal conduit could be installed, into which the thermistor cable is installed after the foundation pad construction is completed.

All thermistor cables would be read seasonally (four times per year) and the ground temperatures assessed for changes and trends that may warrant additional study and implementation of mitigation.

ADAPTIVE FOUNDATION DESIGN

Figure 2 shows that the historical air temperature warming rate for Inuvik is about 0.09°C/year. In the past several decades, the mean annual air temperature has increased several degrees and the ground temperatures have increased.

Historical published literature suggests the typical mean annual ground temperatures in the Inuvik region should range from -1°C to -5°C depending on the ground cover and surface disturbance. Recent literature supports the presence of warmer ground temperatures than the historical "normal" ground temperatures. Burn and Kokelj (2009) reported that ground temperatures in some areas of the Mackenzie Delta are presently 2.5°C warmer than in 1970.

In the event air and ground temperatures continue to warm, the efficiency of a passive ventilated pad to perform satisfactory, particularly over ice-rich soils is potentially compromised. Given the presence of massive ice, warming of the ground more than that estimated by the geothermal modeling reported here could result in significant creep or thaw settlement of the engineered pad and ground surface subsidence as the ice layers warm and/or melt.

To mitigate the potential for adverse performance of the pad and water reservoir structure resulting from climate warming, the incorporation of adaptive strategies is recommended. This approach means that the current design should envision future modifications that can be implemented without significant capital cost or significant disruption of the infrastructure.

One adaptive strategy is to incorporate into the design and construction the ability to install horizontal thermosyphons. This would be accomplished by placing 40 mm to 50 mm diameter steel conduits across the base of the engineered granular pad, into which 20 mm diameter thermosyphon evaporator tubing could be installed. The conduits would be placed at 1 m apart. These conduits should be of appropriate strength to withstand the applied loads of the engineered embankment and water reservoir. They should be sealed to provide ingress of water, debris and animals.

If ground temperature monitoring and other observations indicated that the water reservoir was at risk of experiencing structural distress due to foundation instability, the thermosyphons could be installed to chill the ground and increase the thermal stability of the subgrade.

Reference: Inuvik water reservoir – foundation design

A second adaptive strategy is to install thermostatically controlled fans on the ventilation ducts. These fans would blow cold winter air through the ducts providing greater cooling of the subgrade. Design methods are available to estimate the air flow volume and fan size for most efficient performance.

CLOSURE

This design memorandum addresses the foundation design for supports along the proposed Inuvik water reservoir. It includes several design approaches, relying on a passive ventilated engineered embankment over warm, ice-rich permafrost. The embankment design is adaptable should changes to the geothermal regime require mitigation.

This memorandum is subject to the terms and conditions between Stantec and our client, the Town of Inuvik.

For any questions regarding the information presented herein please contact the undersigned.

STANTEC CONSULTING LTD.

JMOswell

REGISTERED PROFESSIONAL ENGINEER
J. M. OSWELL
Jan 19/18
LICENSEE
N.W.T.

Jim Oswell, Ph.D., P.Eng.
Senior Permafrost Engineer
Phone: (403) 547 5734
jim.oswell@stantec.com

Reviewed by:

Chris McGrath, P.Eng.

REFERENCES

Andersland, O.B. and Ladanyi, B. 1994. An introduction to frozen ground engineering. Chapman and Hall, Toronto. 352 pgs.

Burn, C.R. and Kokelj, S.V., 2009. The environment and permafrost of the Mackenzie Delta area. Permafrost and Periglacial Processes, 20: 83-105.

Canadian Standards Association (CSA). 2010. Technical guide: Infrastructure in permafrost: A guideline for climate change adaptation. CSA Special Publication. Mississauga, ON. 112 pgs.

Hivon, E.G. and Sego, D.C. 1993. Distribution of saline permafrost in the Northwest Territories, Canada. Canadian Geotechnical Journal, 30: 506 – 514.

Klock, R., Hudson, E., Aihoshi, D and Mullock, J. 2001. The weather of the Yukon, Northwest Territories and western Nunavut; Graphical area forecast 35. NavCanada. Ottawa, Ontario. 233 pgs.

NEHTRUH-EBA Consulting Ltd. 2017. Geotechnical evaluation for proposed water reservoir, Inuvik, NT. Report prepared for Town of Inuvik. File: NE 1041/YARC03129-01. 116 pgs.

University of Alaska Fairbanks (UAF). 2018. Scenarios Network for Alaska + Arctic Planning (SNAP). Website: https://www.snap.uaf.edu/sites/all/modules/snap_community_charts/charts.php. Accessed January, 2018.

APPENDIX E Preliminary Engineering Drawings (March 2018)

Stantec

INUVIK

TOWN OF INUVIK, NT
NEW WATER STORAGE RESERVOIR

FEBRUARY 2018
Project Number: 1101-26057

PRELIMINARY DESIGN

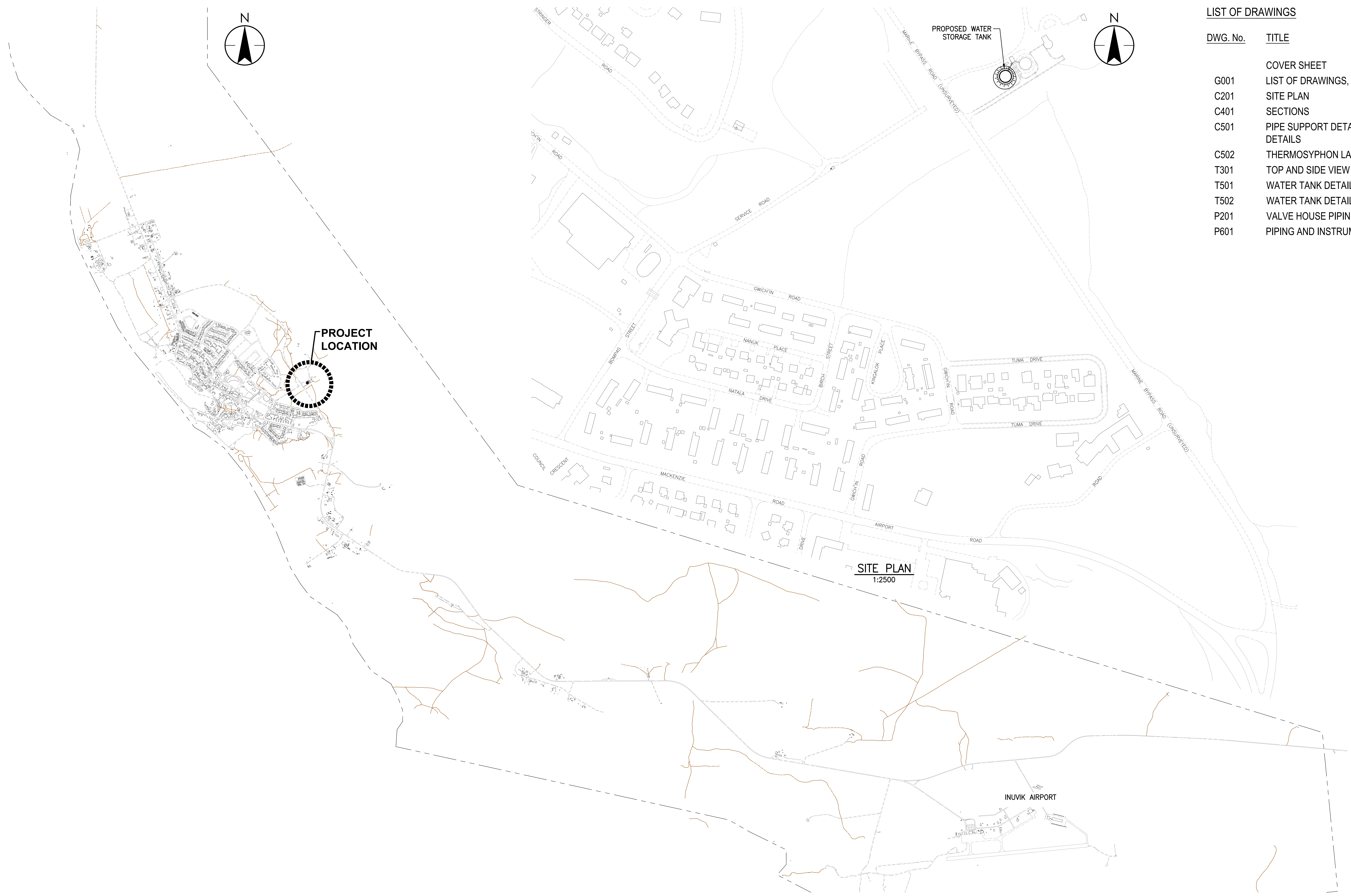

SITE PLAN
1:2500

PROJECT LOCATION PLAN
1:25,000

LIST OF DRAWINGS

DWG. No.	TITLE
	COVER SHEET
G001	LIST OF DRAWINGS, SITE PLAN AND PROJECT LOCATION PLAN
C201	SITE PLAN
C401	SECTIONS
C501	PIPE SUPPORT DETAILS, PILE DETAILS AND INSULATED BEND DETAILS
C502	THERMOSYPHON LAYOUT AND TANK PAD CONSTRUCTION DETAIL
T301	TOP AND SIDE VIEW OF WATER TANK
T501	WATER TANK DETAILS I
T502	WATER TANK DETAILS II
P201	VALVE HOUSE PIPING MODIFICATIONS
P601	PIPING AND INSTRUMENTATION DIAGRAM

1:2500 0 25 75 125m
1:25000 0 250 750 1250m

V:\1101\active\110126057\drafting\drawings\00-general\current\G001.dwg
2018/02/22 8:41 AM By: Buchsdruecker, Bernie

Revision	By	Appd.	YY.MM.DD
A PRELIMINARY DESIGN	K.R.J.	K.R.J.	18.02.23
Issued	By	Appd.	YY.MM.DD

ORIGINAL SHEET - ISO A1

NOT FOR CONSTRUCTION

Permit-Seal

KAVIK-STANTEC

Airport Road
Inuvik, NT
www.stantec.com

The Contractor shall verify and be responsible for all dimensions. DO NOT scale the drawing - any errors or omissions shall be reported to Stantec without delay.
The Copyrights to all designs and drawings are the property of Stantec. Reproduction or use for any purpose other than that authorized by Stantec is forbidden.

Client/Project

INUVIK
TOWN OF INUVIK, NT
NEW WATER STORAGE RESERVOIR
Inuvik, Northwest Territories/Canada

File Name: G001.DWG	B.W.B.	K.R.J.	K.R.J.	18.01.08
	Dwn.	Chkd.	Dsgn.	YY.MM.DD

Title
GENERAL
LIST OF DRAWINGS, SITE PLAN
AND PROJECT LOCATION PLAN

Project No. 1101-26057
Scale AS SHOWN
Drawing No. G001
Sheet of
Revision 0

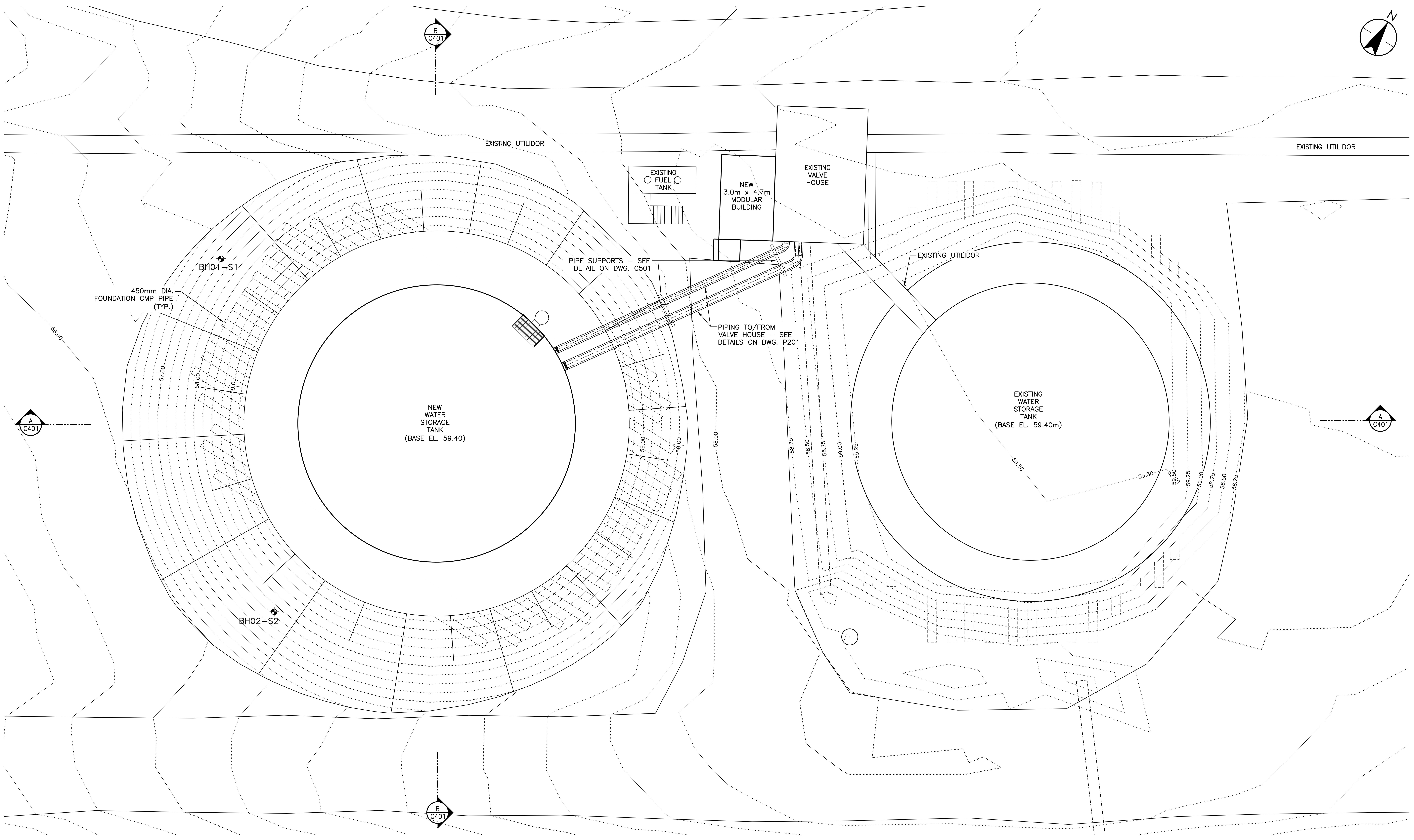

Revision	By	Appd.	YY.MM.DD

Issued	By	Appd.	YY.MM.DD
A PRELIMINARY DESIGN	K.R.J.	K.R.J.	18.02.23

V:\1101\active\110126057\drafting\drawings\01-civil\current\C201-401.dwg
2018/02/21 10:48 AM By: Buchsdruecker, Bernie

ORIGINAL SHEET - ISO A1

NOT FOR CONSTRUCTION

Permit-Seal

KAVIK-STANTEC

Airport Road
Inuvik, NT
www.stantec.com

Client/Project

INUVIK
TOWN OF INUVIK, NT
NEW WATER STORAGE RESERVOIR
Inuvik, Northwest Territories/Canada

File Name: C201-401.DWG

B.W.B.	K.R.J.	K.R.J.	18.01.08
Dwn.	Chkd.	Dsgn.	YY.MM.DD

Title
CIVIL
SITE PLAN

Project No.
110126045

Scale 0 1 3 5m
1:100

Drawing No.
C201

Sheet
of

Revision
0

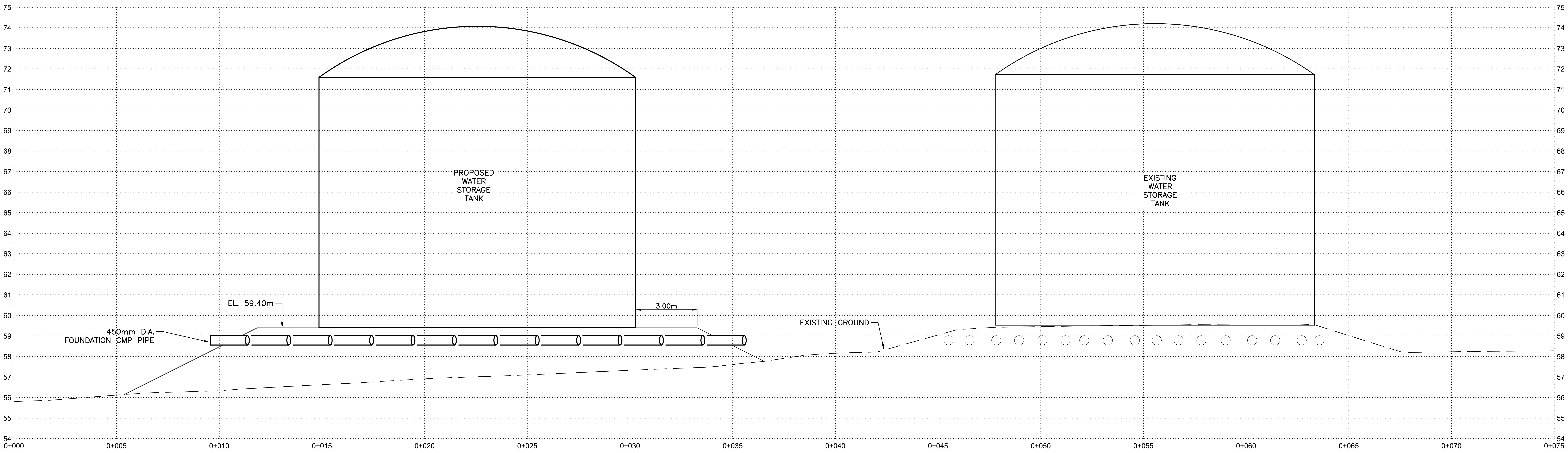

SECTION A–A
1:100

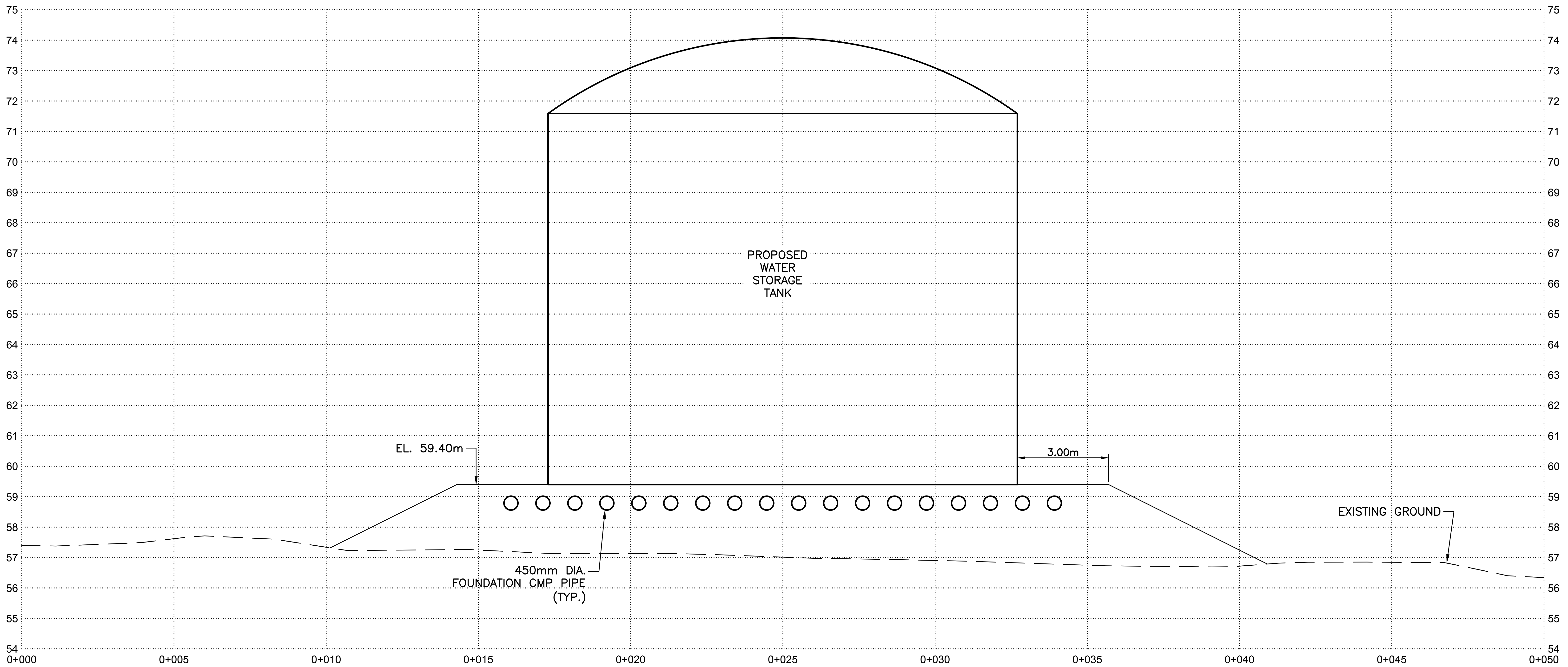

SECTION B–B
1:100

Revision	By	Appd.	YY.MM.DD

Issued	By	Appd.	YY.MM.DD
A PRELIMINARY DESIGN	K.R.J.	K.R.J.	18.02.23

V:\1101\active\110126057\drafting\drawings\01-civil\current\C201-401.dwg
2018/02/21 10:37 AM By: Buchsdruecker, Bernie

ORIGINAL SHEET - ISO A1

NOT FOR CONSTRUCTION

Permit-Seal

KAVIK-STANTEC

Airport Road
Inuvik, NT
www.stantec.com

Client/Project

INUVIK
TOWN OF INUVIK, NT
NEW WATER STORAGE RESERVOIR
Inuvik, Northwest Territories/Canada

File Name: C201-401.DWG	B.W.B.	K.R.J.	K.R.J.	18.01.08
	Dwn.	Chkd.	Dsgn.	YY.MM.DD

Title
CIVIL
SECTIONS

Project No.
110126045

Scale 0 1 3 5m
1:100

Drawing No.
C401

Sheet
of

Revision
0

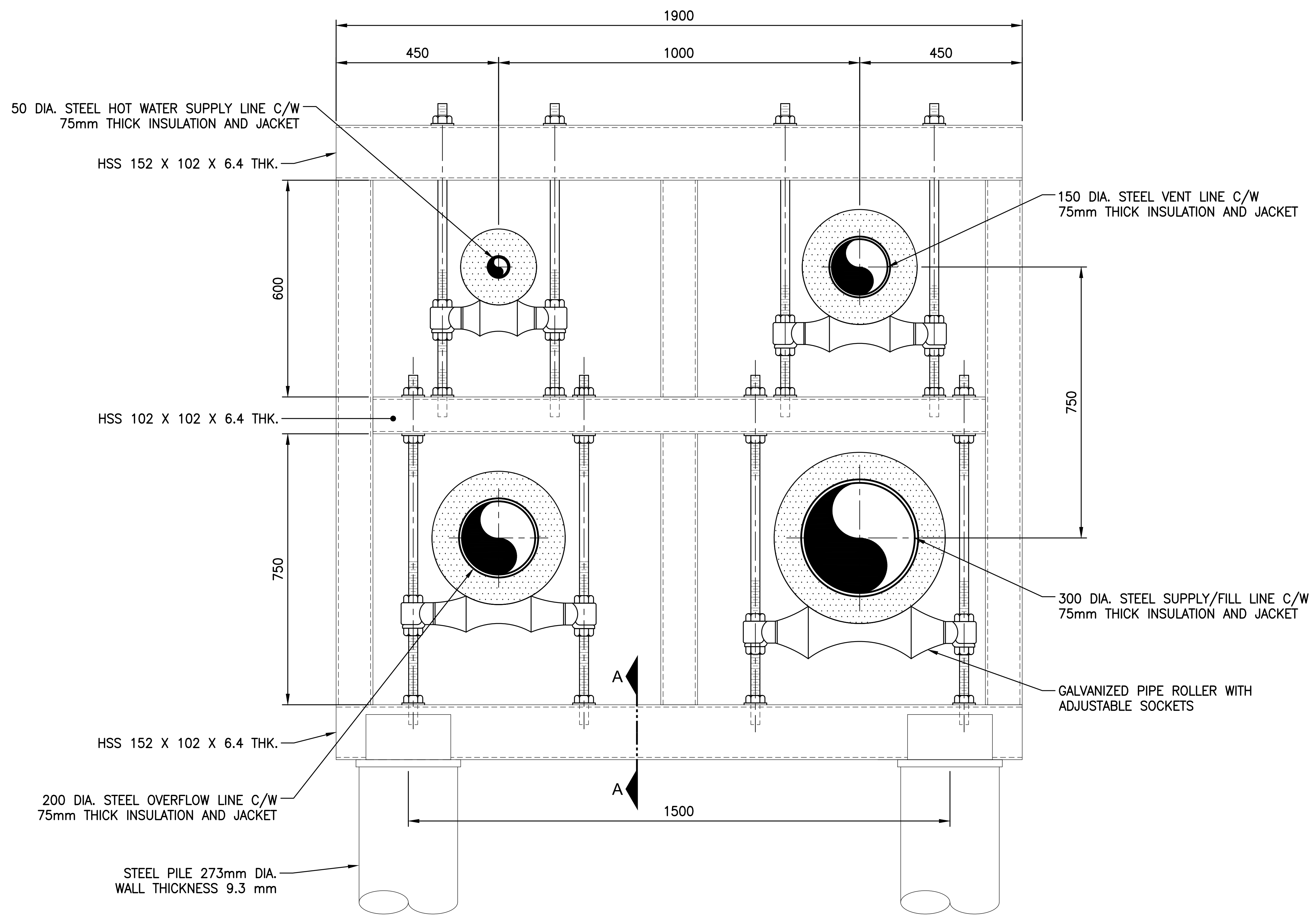

PIPE SUPPORT DETAIL
1:10

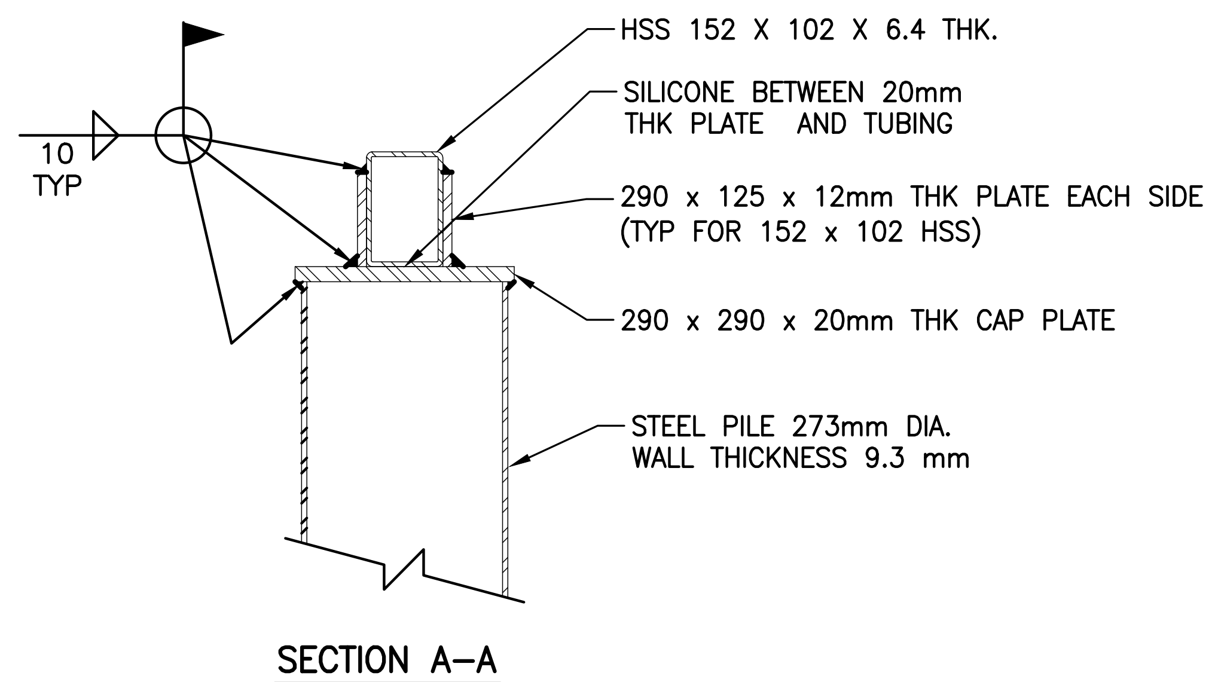

SECTION A–A
1:10

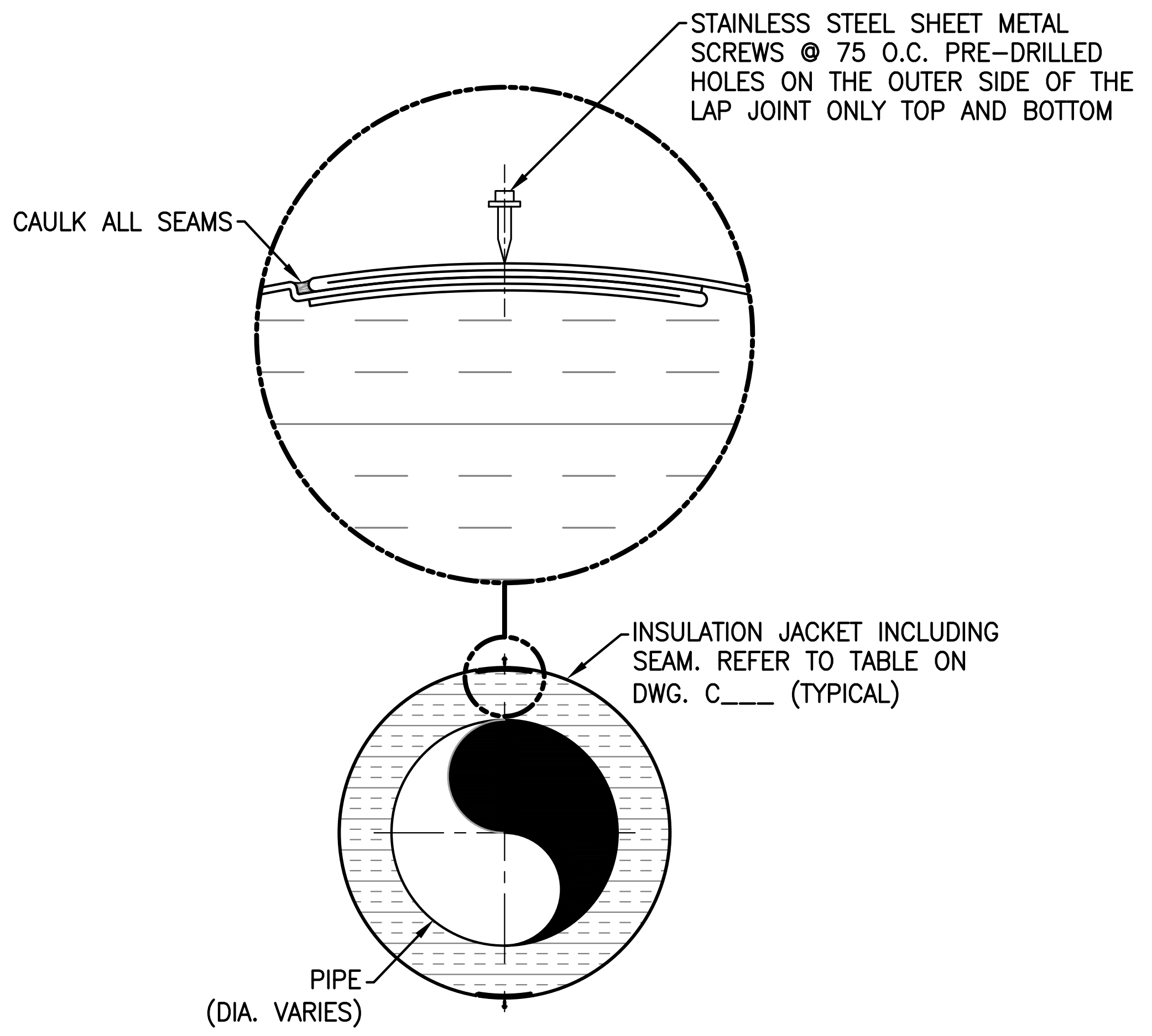

BEND SEAM ASSEMBLY TYPICAL DETAIL
N.T.S.

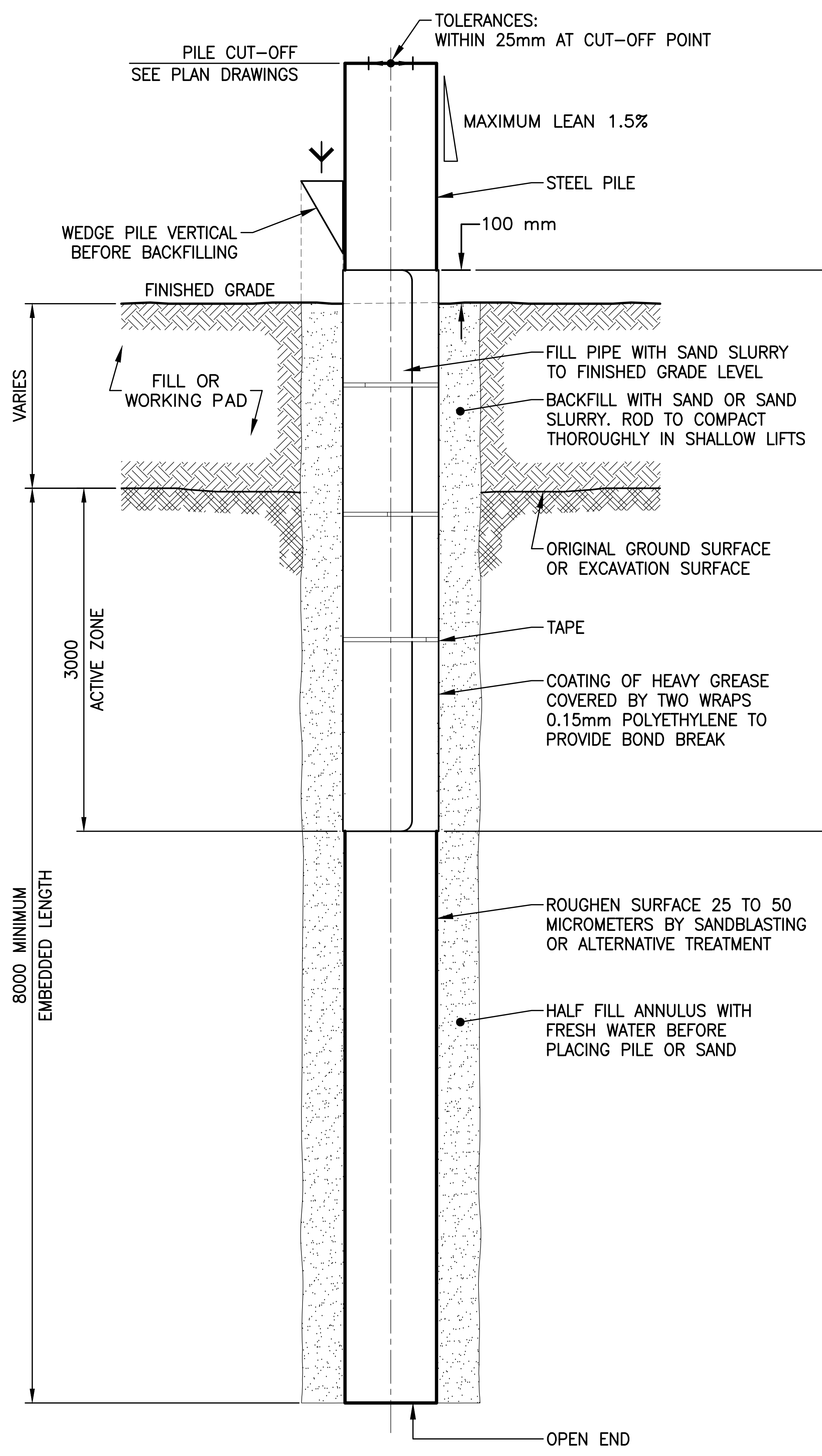

TYPICAL ADFREEZE PILE INSTALLATION
N.T.S.

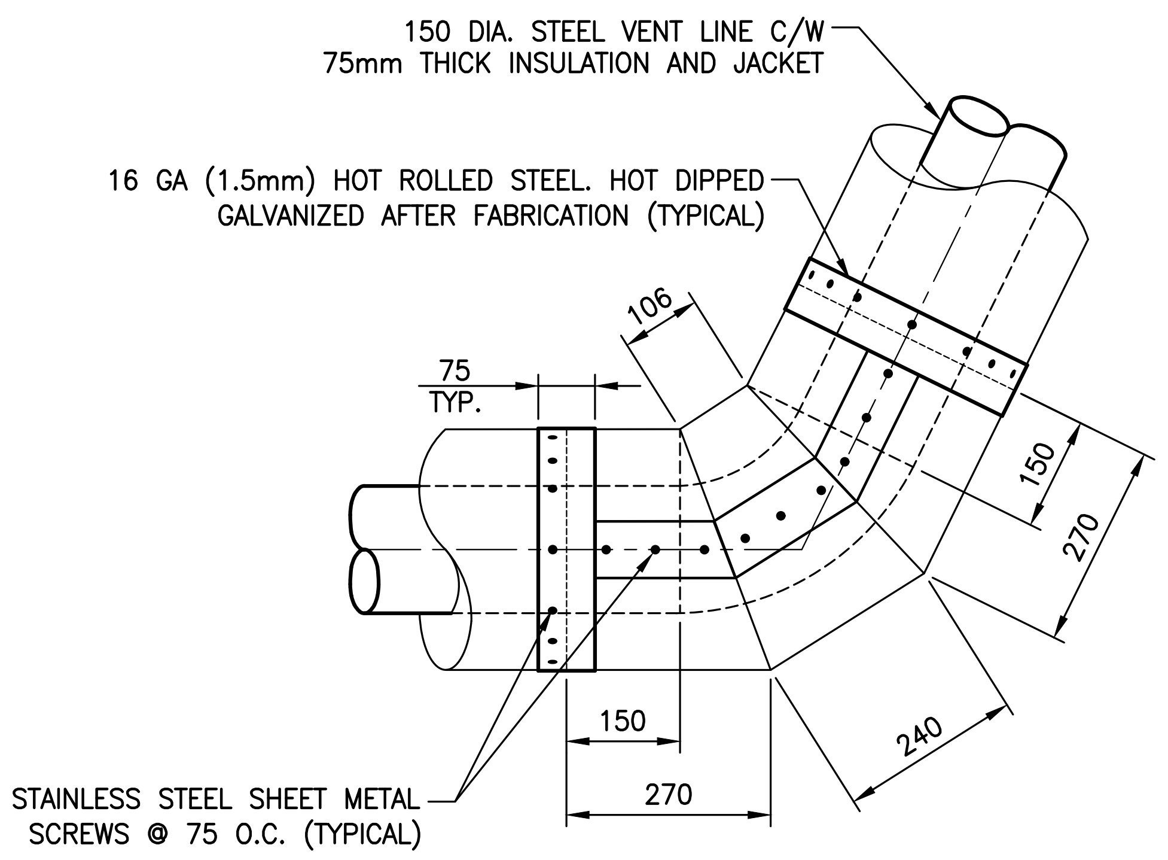

150 DIA. 63.8° BEND DETAIL
N.T.S.

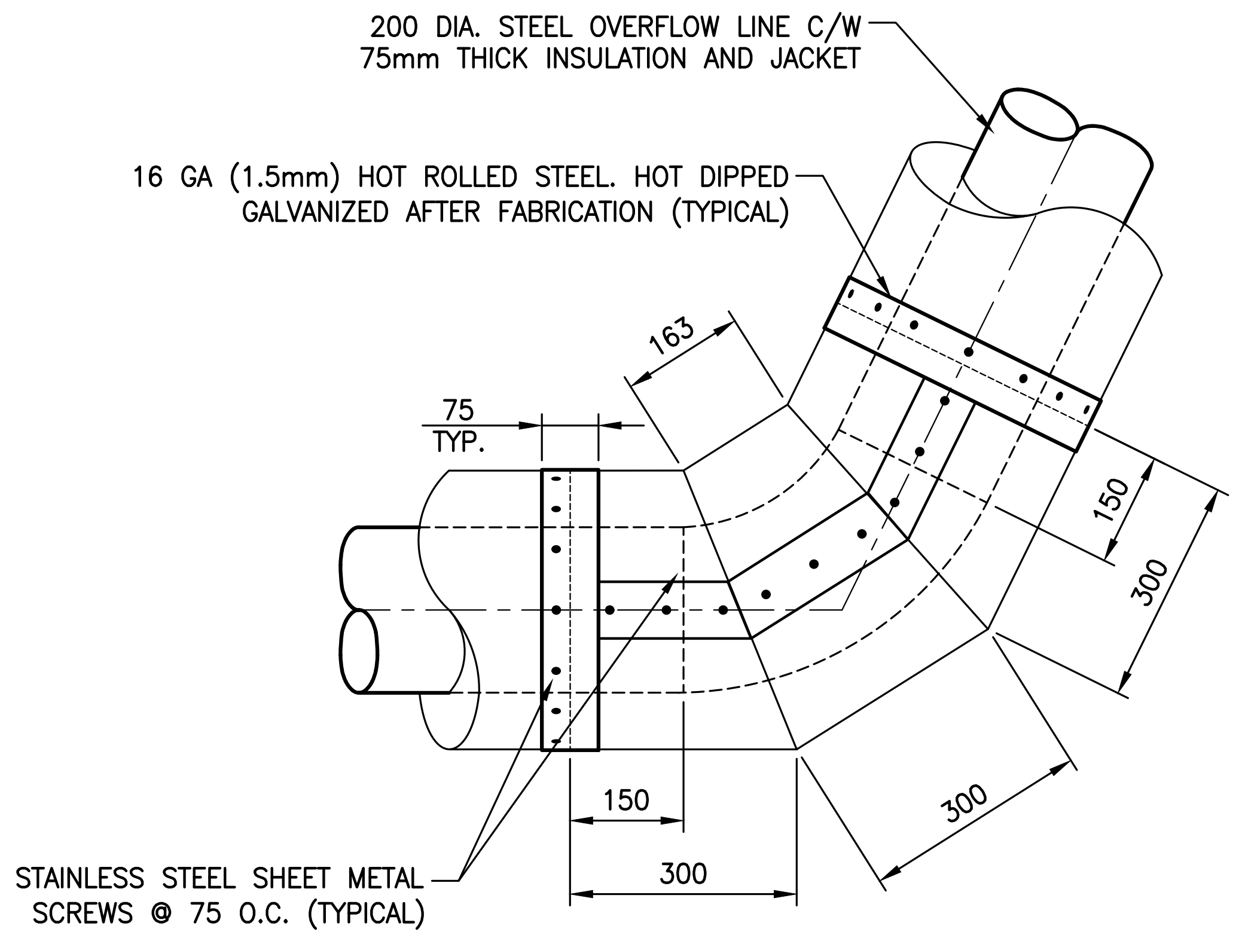

200 DIA. 63.8° BEND DETAIL
N.T.S.

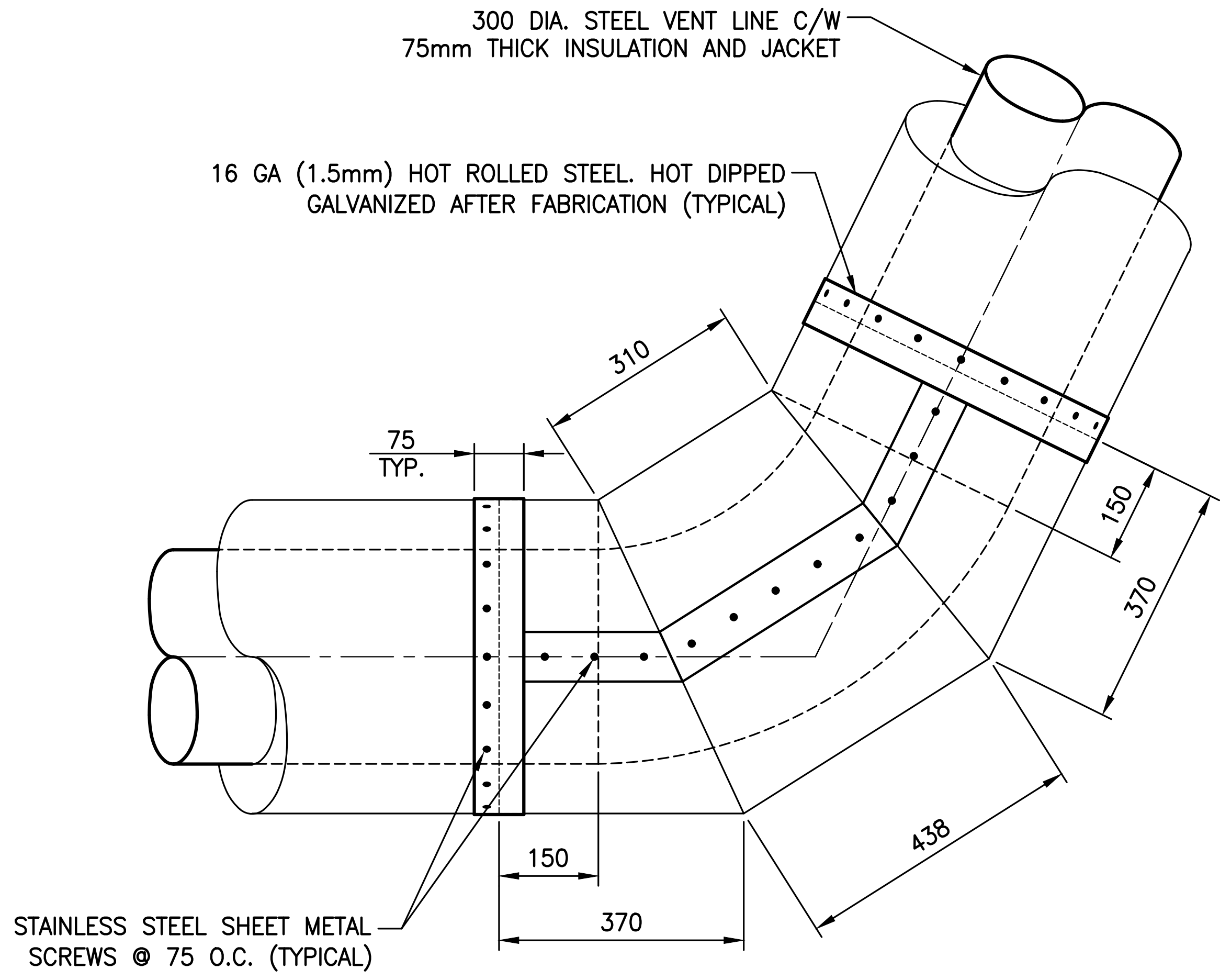

300 DIA. 63.8° BEND DETAIL
N.T.S.

V:\1101\active\110126057\drafting\drawings\01-civil\current\C501-502.dwg
2018/02/21 10:33 AM By: Buchsdruecker, Bernie

Revision	By	Appd.	YY.MM.DD
A PRELIMINARY DESIGN	M.M.	K.R.J.	18.02.23
Issued	By	Appd.	YY.MM.DD

ORIGINAL SHEET - ISO A1

NOT FOR CONSTRUCTION

Permit-Seal

KAVIK-STANTEC

Airport Road
Inuvik, NT
www.stantec.com

Client/Project

INUVIK

TOWN OF INUVIK, NT
NEW WATER STORAGE RESERVOIR
Inuvik, Northwest Territories/Canada

File Name: C501-502.DWG	B.W.B.	K.R.J.	M.M.	18.01.08
	Dwn.	Chkd.	Dsgn.	YY.MM.DD

Title

CIVIL
PIPE SUPPORT DETAILS, PILE DETAILS
AND INSULATED BEND DETAILS

Project No. 110126045
Scale 1:25 0 250 750 1250mm

Drawing No. C501
Sheet of
Revision 0

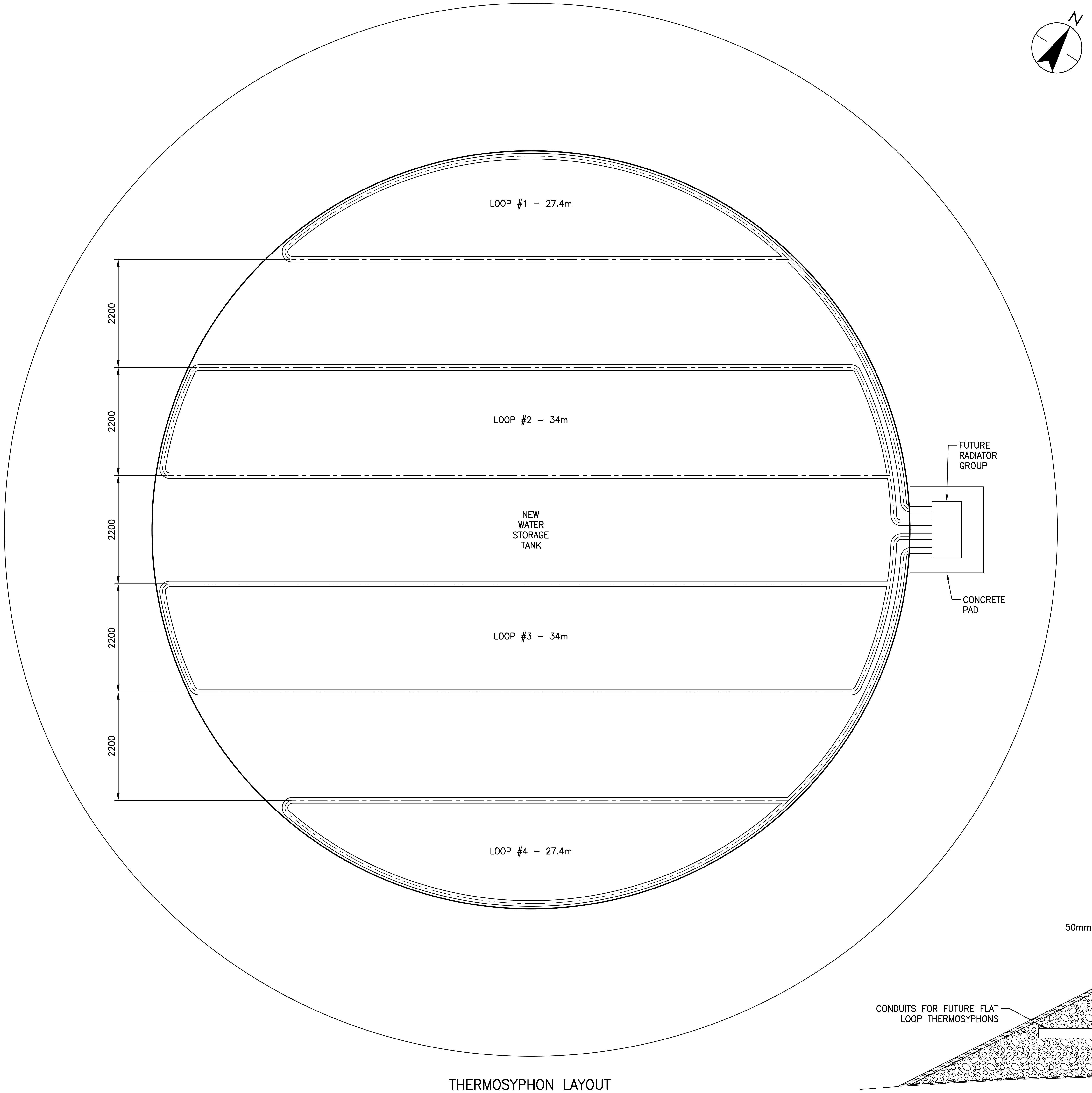

THERMOSYPHON LAYOUT
1:50

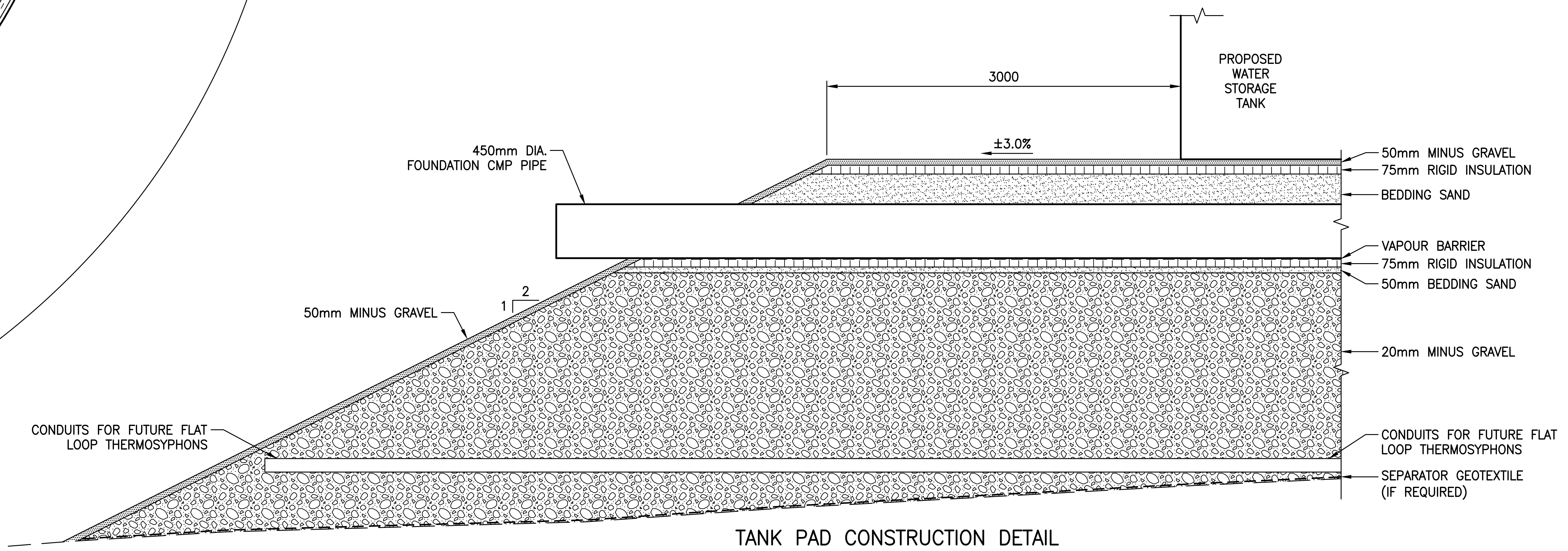

TANK PAD CONSTRUCTION DETAIL
1:30

V:\1101\active\110126057\drafting\drawings\01-civil\current\C501-502.dwg
2018/02/21 11:02 AM By: Buchsdruecker, Bernie

Revision	By	Appd.	YY.MM.DD

Issued	By	Appd.	YY.MM.DD
A PRELIMINARY DESIGN	J.M.O.	K.R.J.	18.02.23

ORIGINAL SHEET - ISO A1

**NOT FOR
CONSTRUCTION**

Permit-Seal

KAVIK-STANTEC

Airport Road
Inuvik, NT
www.stantec.com

The Contractor shall verify and be responsible for all dimensions. DO NOT scale the drawing - any errors or omissions shall be reported to Stantec without delay.

Client/Project

INUVIK
TOWN OF INUVIK, NT
NEW WATER STORAGE RESERVOIR
Inuvik, Northwest Territories/Canada

File Name: C501-502.DWG

B.W.B.	K.R.J.	J.M.O.	18.01.08
Dwn.	Chkd.	Dsgn.	YY.MM.DD

Title
CIVIL
THERMOSYPHON LAYOUT AND
TANK PAD CONSTRUCTION DETAIL

Project No.
110126045

Scale 0 250 750 1250mm
AS SHOWN 1:25

Drawing No.
C502

Sheet
of

Revision
0

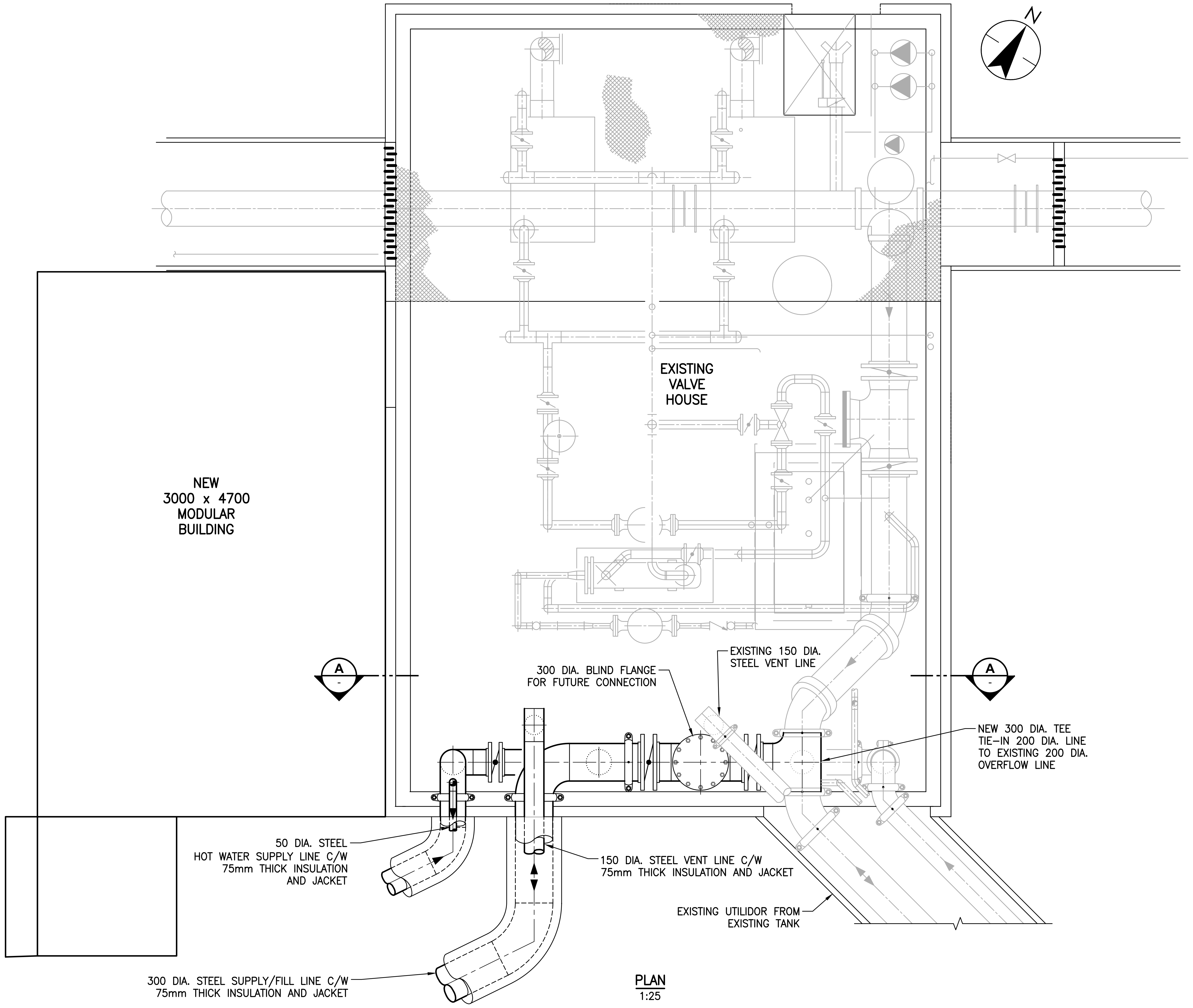

PLAN
1:25

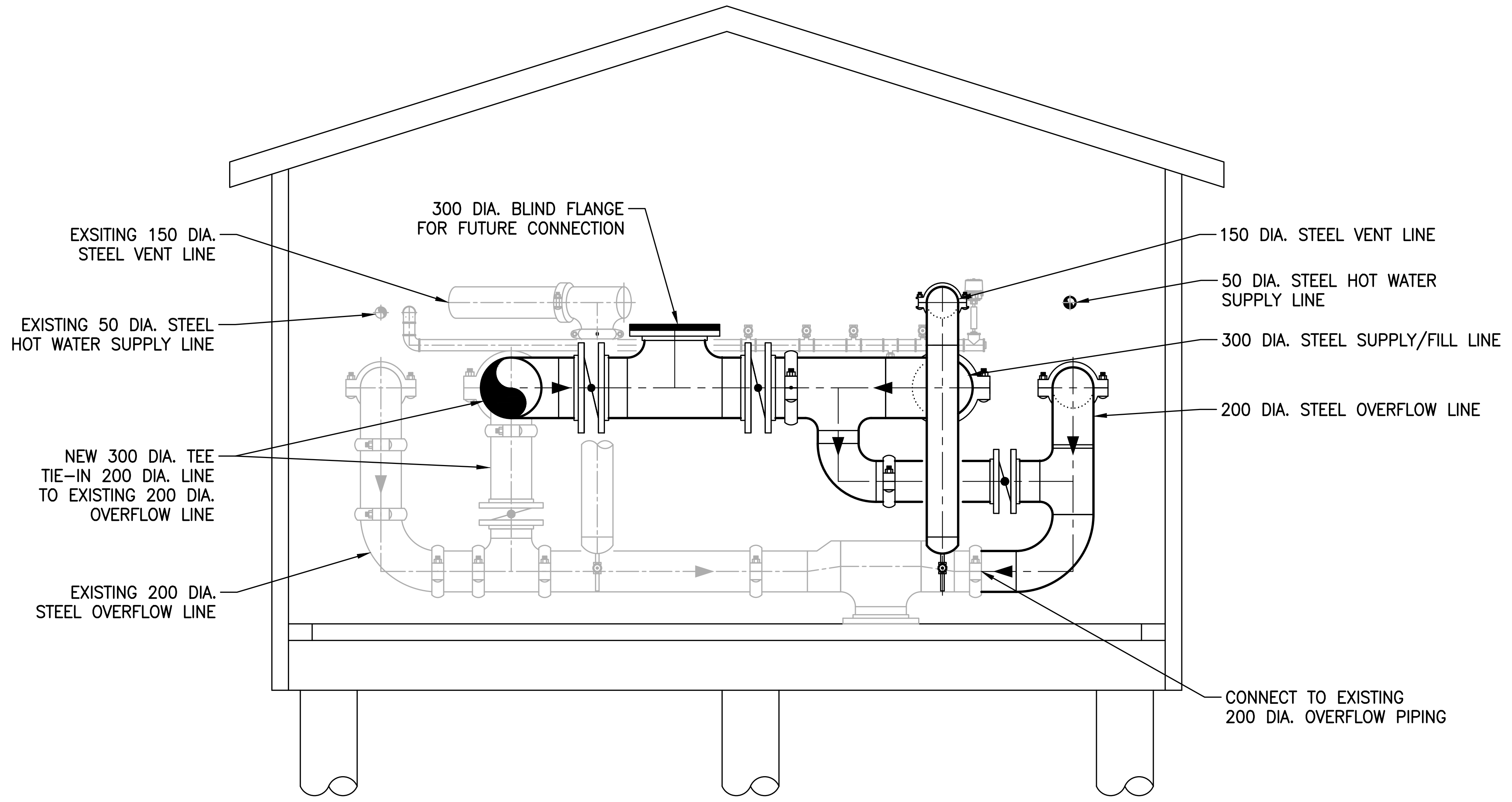

A
–
SECTION
1:25

V:\1101\active\110126057\drafting\drawings\05-process\current\P201.DWG
2018/02/21 10:51 AM By: Buchsdruecker, Bernie

Revision	By	Appd.	YY.MM.DD
A PRELIMINARY DESIGN	S.K.	K.R.J.	18.02.23
Issued	By	Appd.	YY.MM.DD

ORIGINAL SHEET - ISO A1

NOT FOR CONSTRUCTION

Permit-Seal

KAVIK-STANTEC

Airport Road
Inuvik, NT
www.stantec.com

The Contractor shall verify and be responsible for all dimensions. DO NOT scale the drawing - any errors or omissions shall be reported to Stantec without delay.

Client/Project
INUVIK
TOWN OF INUVIK, NT
NEW WATER STORAGE RESERVOIR
Inuvik, Northwest Territories/Canada

File Name: P201.DWG	B.W.B.	S.K.	S.K.	18.01.08
	Dwn.	Chkd.	Dsgn.	YY.MM.DD

Title
PROCESS
VALVE HOUSE
PIPING MODIFICATIONS

Project No.
110126057

Scale 1:25 0 250 750 1250mm

Drawing No. P201
Sheet of
Revision 0

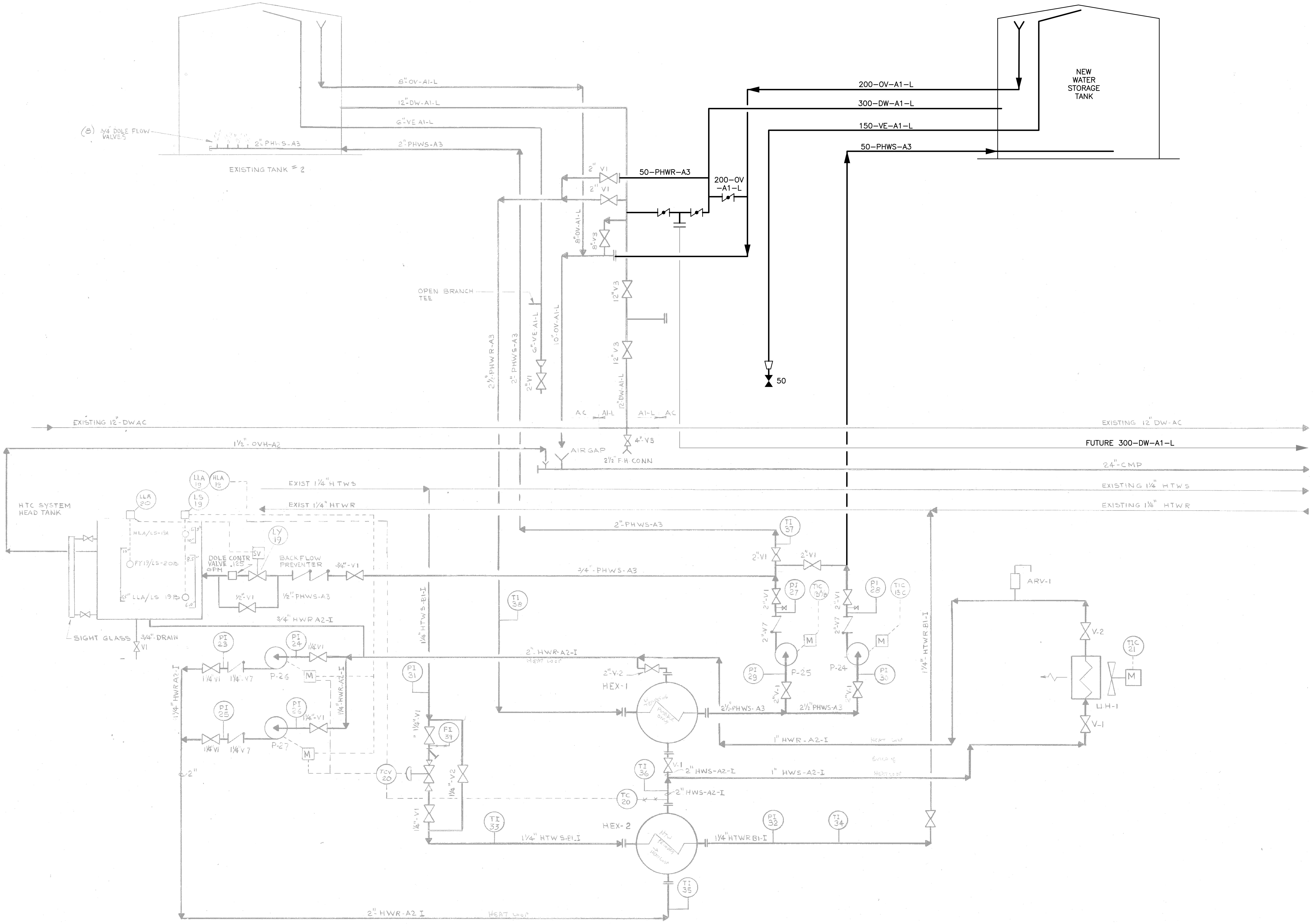

Revision	By	Appd.	YY.MM.DD
A PRELIMINARY DESIGN	S.K.	K.R.J.	18.02.23
Issued	By	Appd.	YY.MM.DD

V:\1101\active\110126057\drafting\drawings\05-process\current\P601.DWG
2018/02/21 11:00 AM By: Buchsdruecker, Bernie

ORIGINAL SHEET - ISO A1

NOT FOR CONSTRUCTION

Permit-Seal

KAVIK-STANTEC

Airport Road
Inuvik, NT
www.stantec.com

The Contractor shall verify and be responsible for all dimensions. DO NOT scale the drawing - any errors or omissions shall be reported to Stantec without delay.
The Copyrights to all designs and drawings are the property of Stantec. Reproduction or use for any purpose other than that authorized by Stantec is forbidden.

Client/Project

INUVIK
TOWN OF INUVIK, NT
NEW WATER STORAGE RESERVOIR
Inuvik, Northwest Territories/Canada

File Name: P601.DWG	B.W.B.	S.K.	S.K.	18.01.08
	Dwn.	Chkd.	Dsgn.	YY.MM.DD

Title
PROCESS
PIPING AND INSTRUMENTATION DIAGRAM

Project No.
110126045

Scale

Drawing No.
P601

Sheet
of

Revision
0

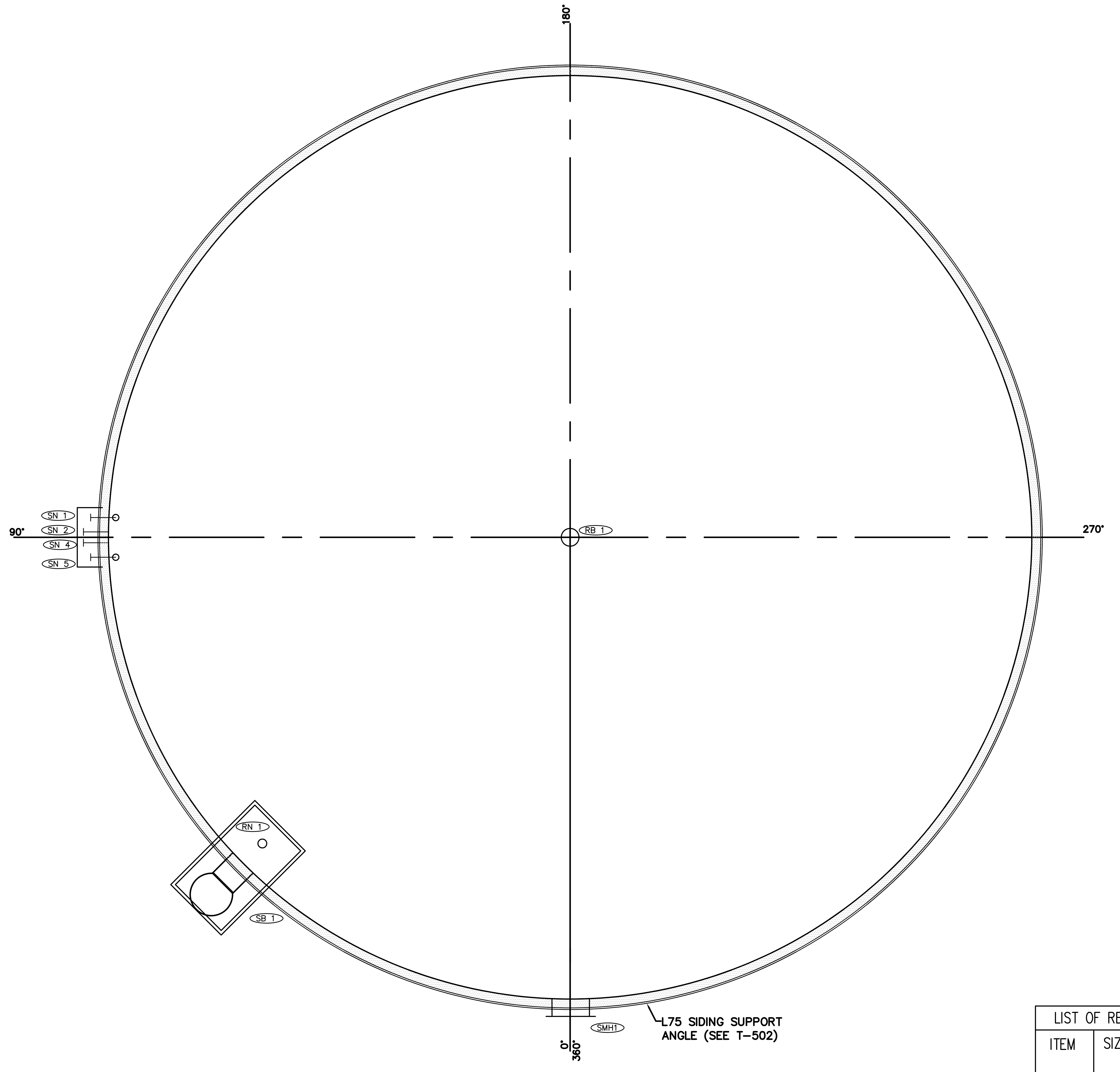

1 T301 TREATED WATER STORAGE TANK – 15.54m ø X 12.19m H – TOP VIEW
SCALE: NTS

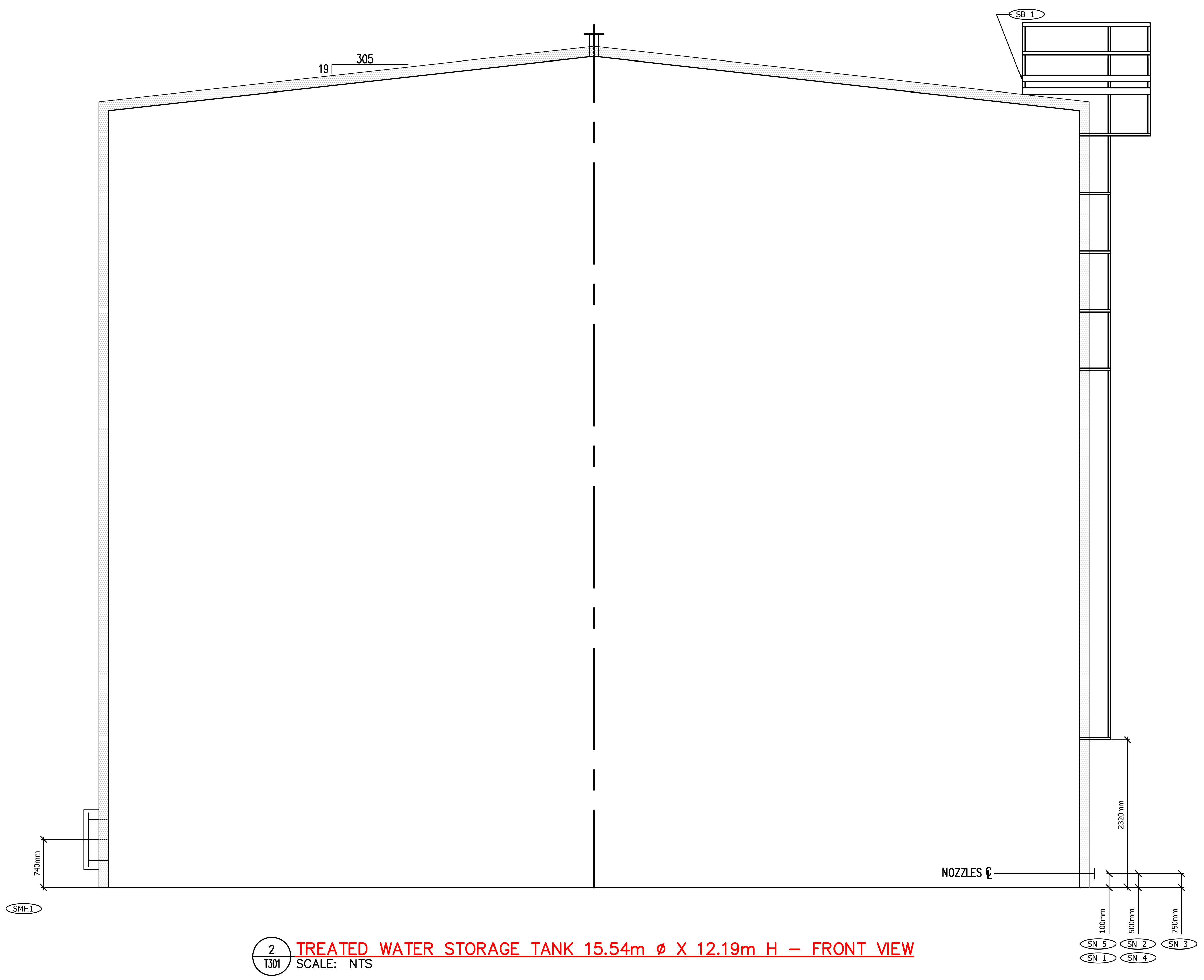

2 T301 TREATED WATER STORAGE TANK 15.54m ø X 12.19m H – FRONT VIEW
SCALE: NTS

LIST OF REQUIRED APPURTENANCES FOR NEW TREATED WATER STORAGE VERTICAL TANK

ITEM	SIZE	ELEV. ABOVE BASE RING (TO CL)	DESCRIPTION	COMMENTS	ANGULAR LOCATION – CW DECIMAL DEGREES
SN2	200 ø	500	300mm ø SUPPLY LINE	SEE DETAIL DRAWING	90.00
SN4	300 ø	500	200mm ø OVERFLOW LINE	SEE DETAIL DRAWING	90.00
SN5	50 ø	100	TANK DRAIN VALVE WITH KAMLOCK (SUPPLY 6.0m x 50mmø HOSE FOR TANK DRAINING)	SEE DETAIL DRAWING	90.00
SMH1	760 ø	740	COVER 960mm, NECK 760mm, FLANGE THICKNESS 11mm, COVER THICKNESS 14mm.		360.00
SN3	200 ø	750	150mm ø VENT LINE	SEE DETAIL DRAWING	135.00
SB1			CENTER OF ACCESS LADDER	SEE DETAIL DRAWING	45.00
SN1	50 ø	100	PRESSURE TRANSDUCER PORT C/W ISOLATION GATE VALVE	SEE DETAIL DRAWING	90.00

LIST ROOF APPURTENANCES FOR NEW WATER STORAGE VERTICAL TANK

ITEM	SIZE	HOR. LOCATION FROM EDGE OF SHELL (CL)	DESCRIPTION	COMMENTS	ANGULAR LOCATION – CW DECIMAL DEGREES
RB1	150 ø	MIDDLE OF TANK	CABLE SUPPORT POST		
RN1	150 ø	650	LEVEL GAUGE ACCESS PORT		45.00

3 T301 ORIENTATION PLAN – NEW TREATED WATER STORAGE TANK
SCALE: NTS

Revision	By	Appd.	YY.MM.DD
0 INITIAL SUBMISSION	KC	WO	18.02.22

Issued	By	Appd.	YY.MM.DD
A PRELIMINARY	KC	WO	18.02.22

NOT FOR CONSTRUCTION

Permit-Seal

KAVIK-STANTEC

Airport Road
Inuvik, NT
www.stantec.com

The Contractor shall verify and be responsible for all dimensions. DO NOT scale the drawing - any errors or omissions shall be reported to Stantec without delay.

Client/Project
INUVIK
TOWN OF INUVIK, NT
NEW WATER STORAGE RESERVOIR
Inuvik, Northwest Territories/Canada

File Name:	Dwn.	Chkd.	Dsgn.	YY.MM.DD
110126057_T301_T501-502.DWG	KC	LM	WO	18.02.22

Title
TOP AND SIDE VIEW OF WATER TANK

Project No.
110126057

Scale
AS SHOWN

Drawing No.
T301

Sheet
of

Revision
0

V:\01-636\active\1101\110126057\06_drawings\civil\110126057_T301_T501-502.dwg
2018/02/26 11:46 AM By: Corcoran, Kevin

ORIGINAL SHEET - ISO A1

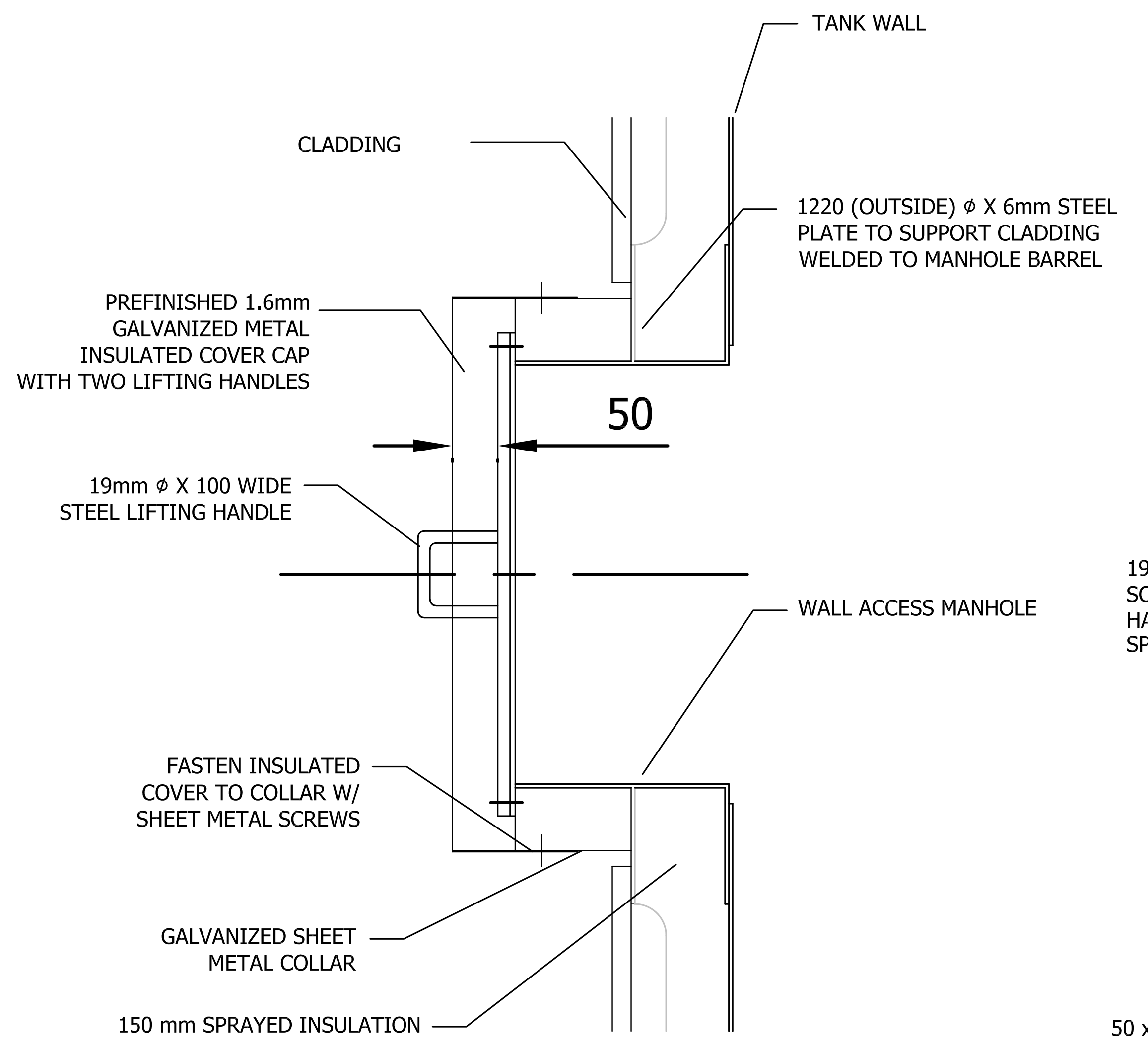

1 T501 ACCESS MANHOLE INSULATION
SCALE: NTS

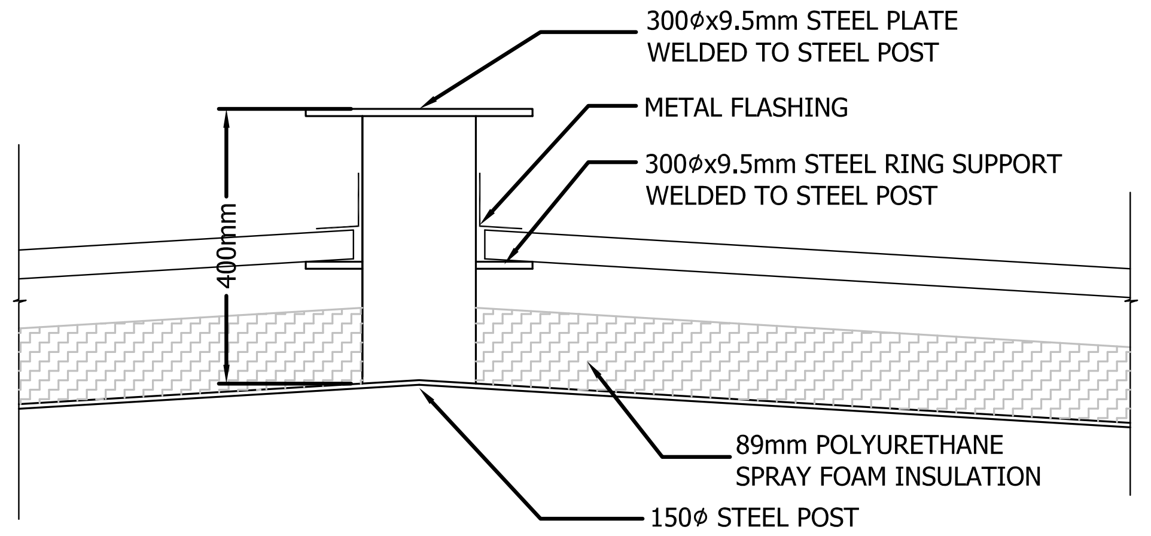

2 T501 PAINTER POST DETAIL
SCALE: NTS

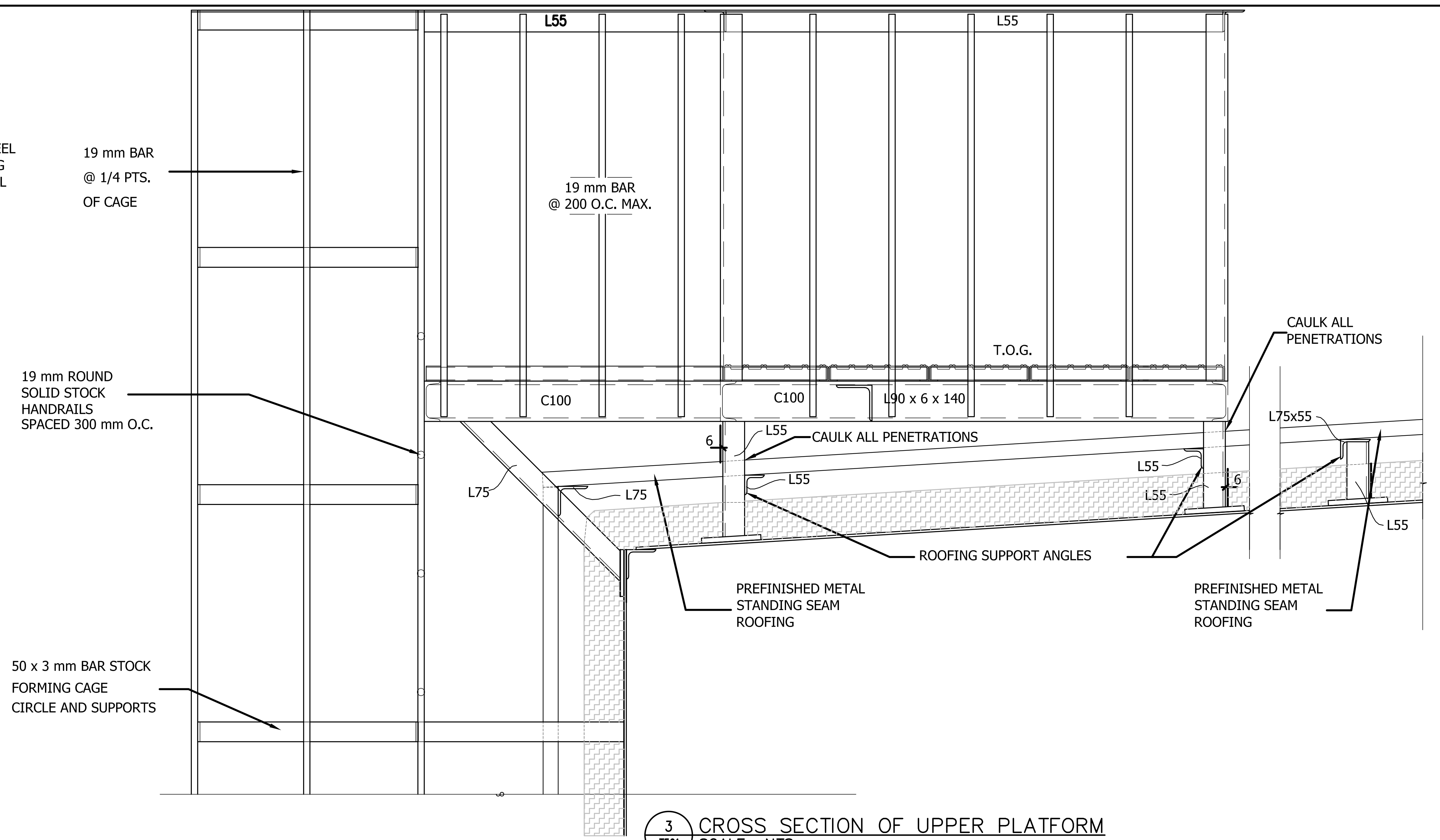

3 T501 CROSS SECTION OF UPPER PLATFORM
SCALE: NTS

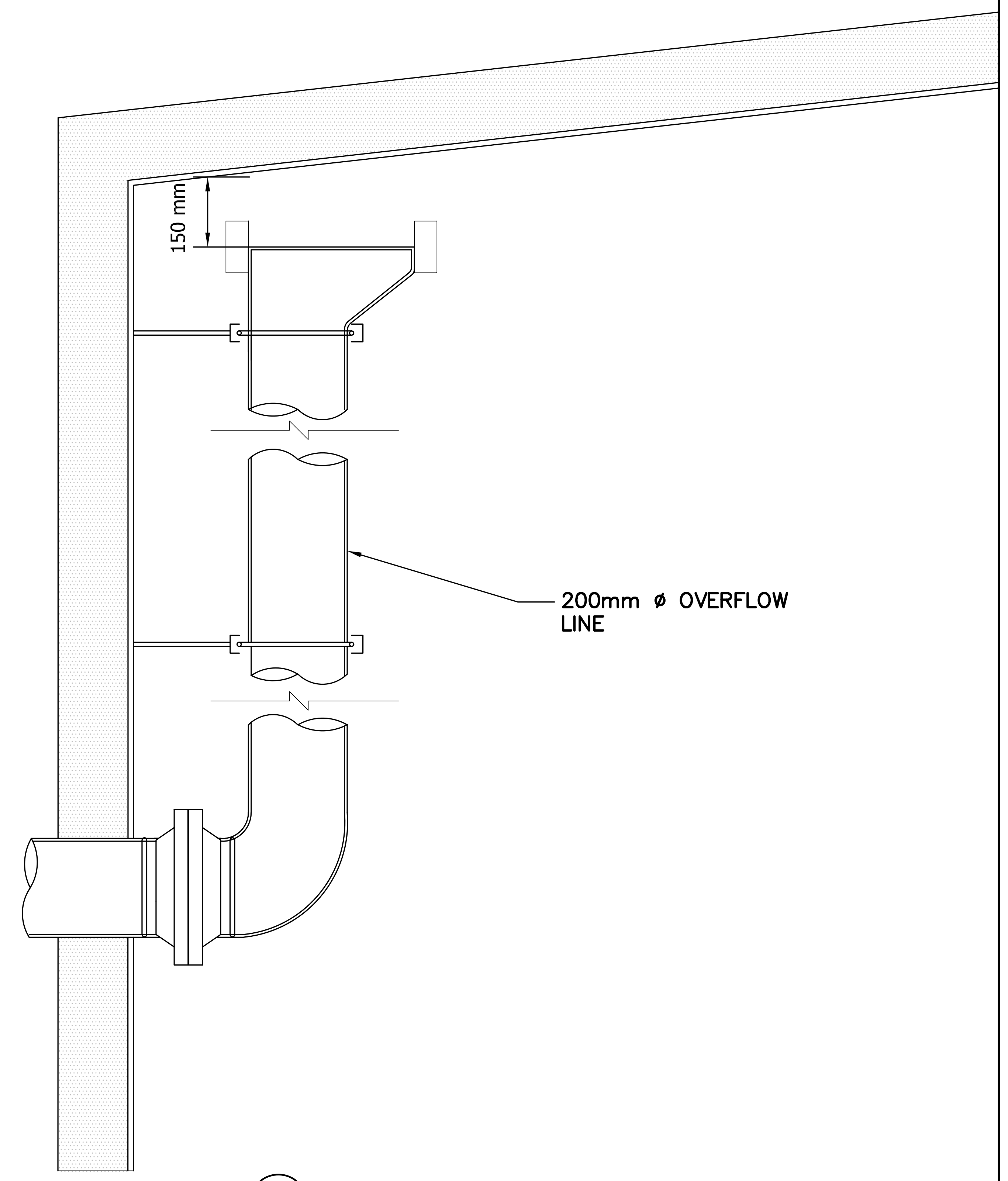

4 T501 SECTION 200mm⌀ OVERFLOW LINE
SCALE: NTS

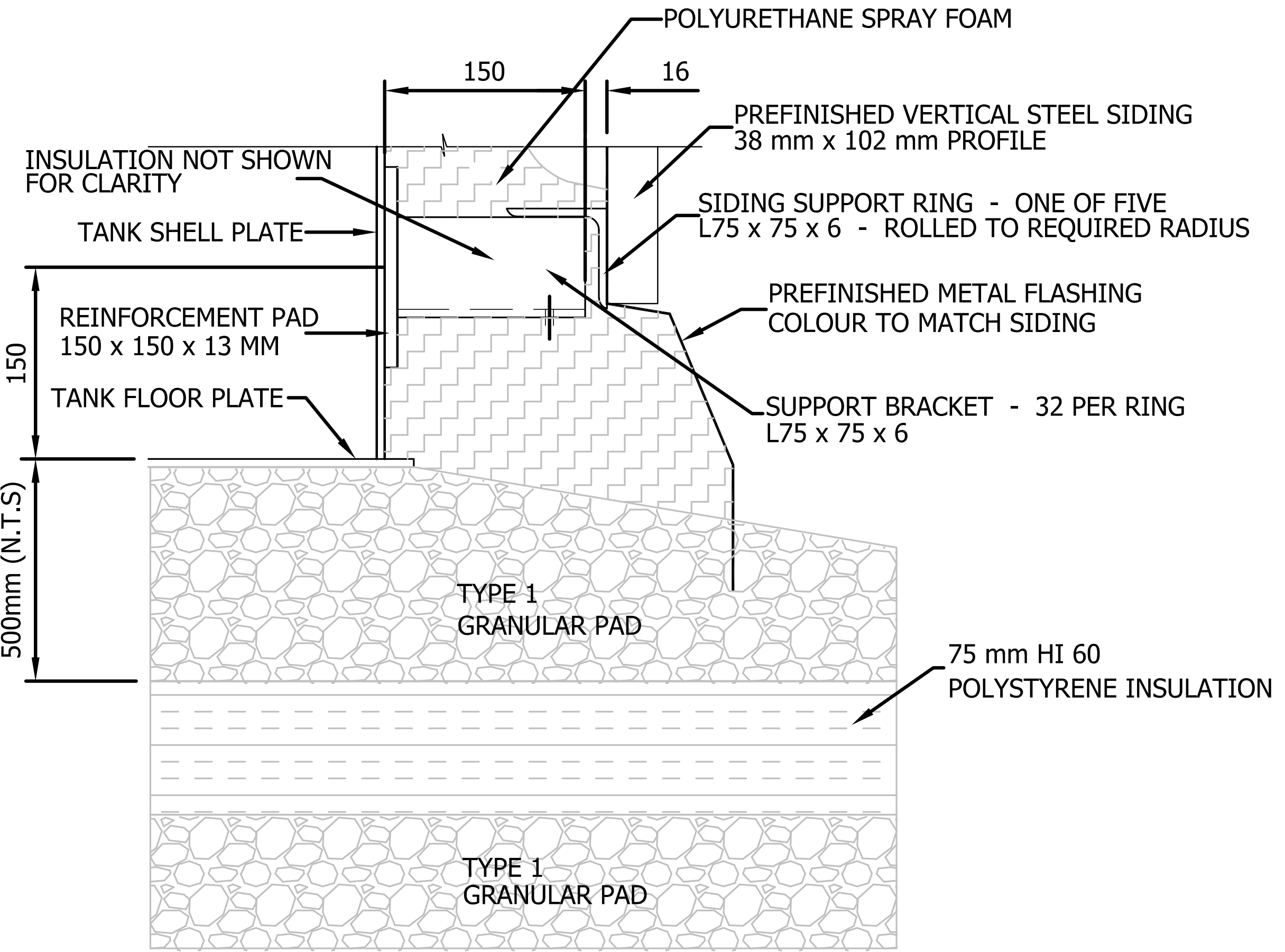

5 T501 TANK WALL CROSS SECTION – LOWER WALL SECTION
SCALE: NTS

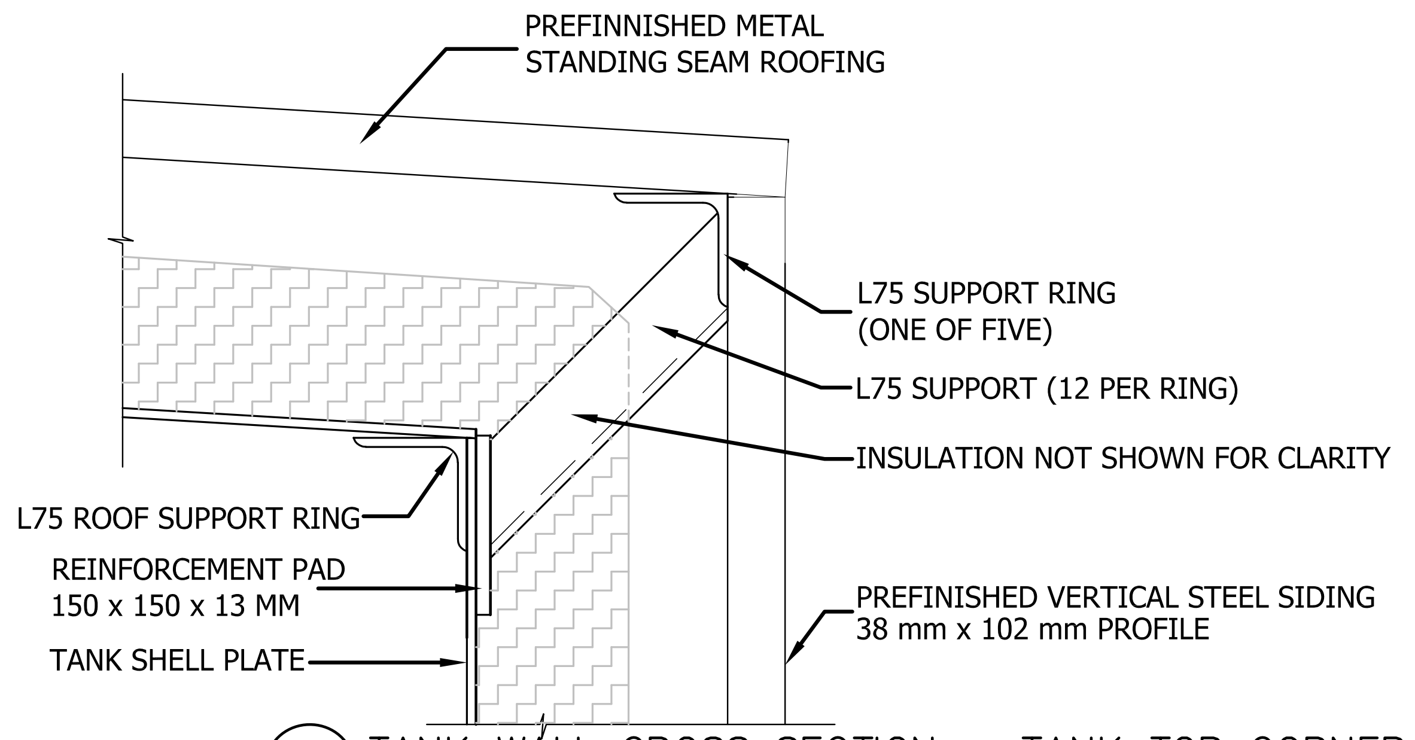

6 T501 TANK WALL CROSS SECTION – TANK TOP CORNER
SCALE: NTS

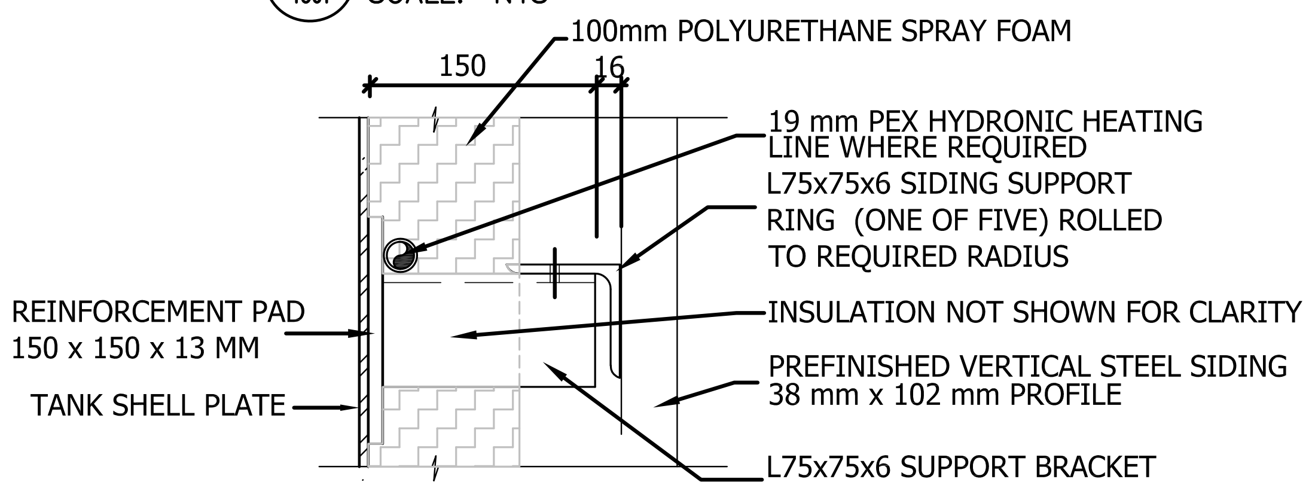

7 T501 TANK WALL CROSS SECTION – SIDE ELEVATION
SCALE: NTS

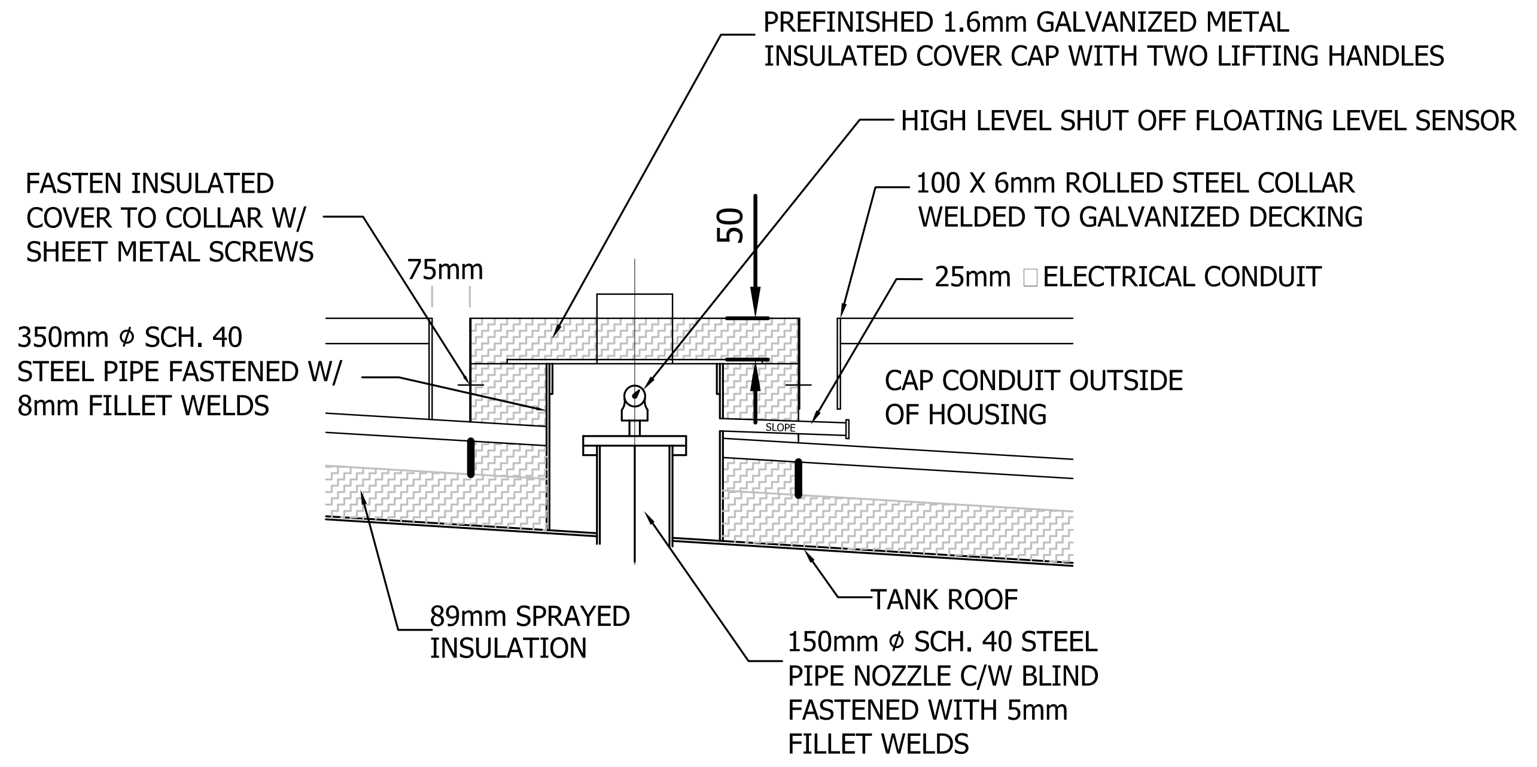

7 T501 LEVEL GAUGE CONNECTION DETAIL
SCALE: NTS

0 INITIAL SUBMISSION	KC	WO	18.02.22
Revision	By	Appd.	YY.MM.DD
A PRELIMINARY	KC	WO	18.02.22
Issued	By	Appd.	YY.MM.DD

NOT FOR CONSTRUCTION

Permit-Seal

KAVIK·STANTEC
Airport Road
Inuvik, NT
www.stantec.com

The Contractor shall verify and be responsible for all dimensions. DO NOT scale the drawing - any errors or omissions shall be reported to Stantec without delay.
The Copyrights to all designs and drawings are the property of Stantec. Reproduction or use for any purpose other than that authorized by Stantec is forbidden.

Client/Project
INUVIK
TOWN OF INUVIK, NT
NEW WATER STORAGE RESERVOIR
Inuvik, Northwest Territories/Canada

File Name:	KC	LM	WO	YY.MM.DD
110126057_T301_T501-502.DWG	Dwn.	Chkd.	Dsgn.	18.02.22

Title
WATER TANK DETAILS
SHEET 1 OF 2

Project No. 110126057
Scale AS SHOWN
Drawing No. T501
Sheet of
Revision 0

V:\01-636\active\1101\110126057\06_drawings\civil\110126057_T301_T501-502.dwg
2018/02/26 11:47 AM By: Corcoran, Kevin
ORIGINAL SHEET - ISO A1

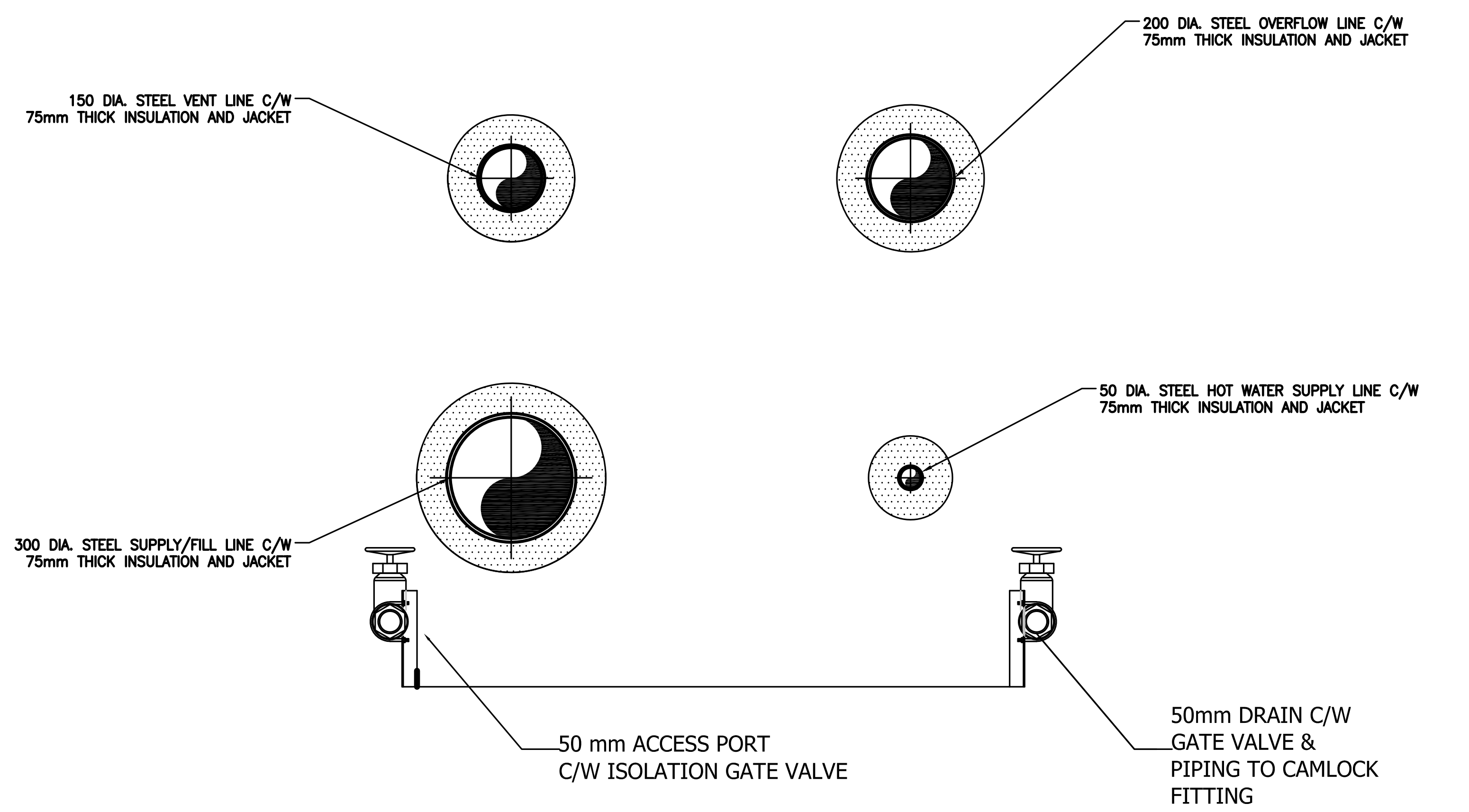

A-A T502 SECTION A–A
SCALE: NTS

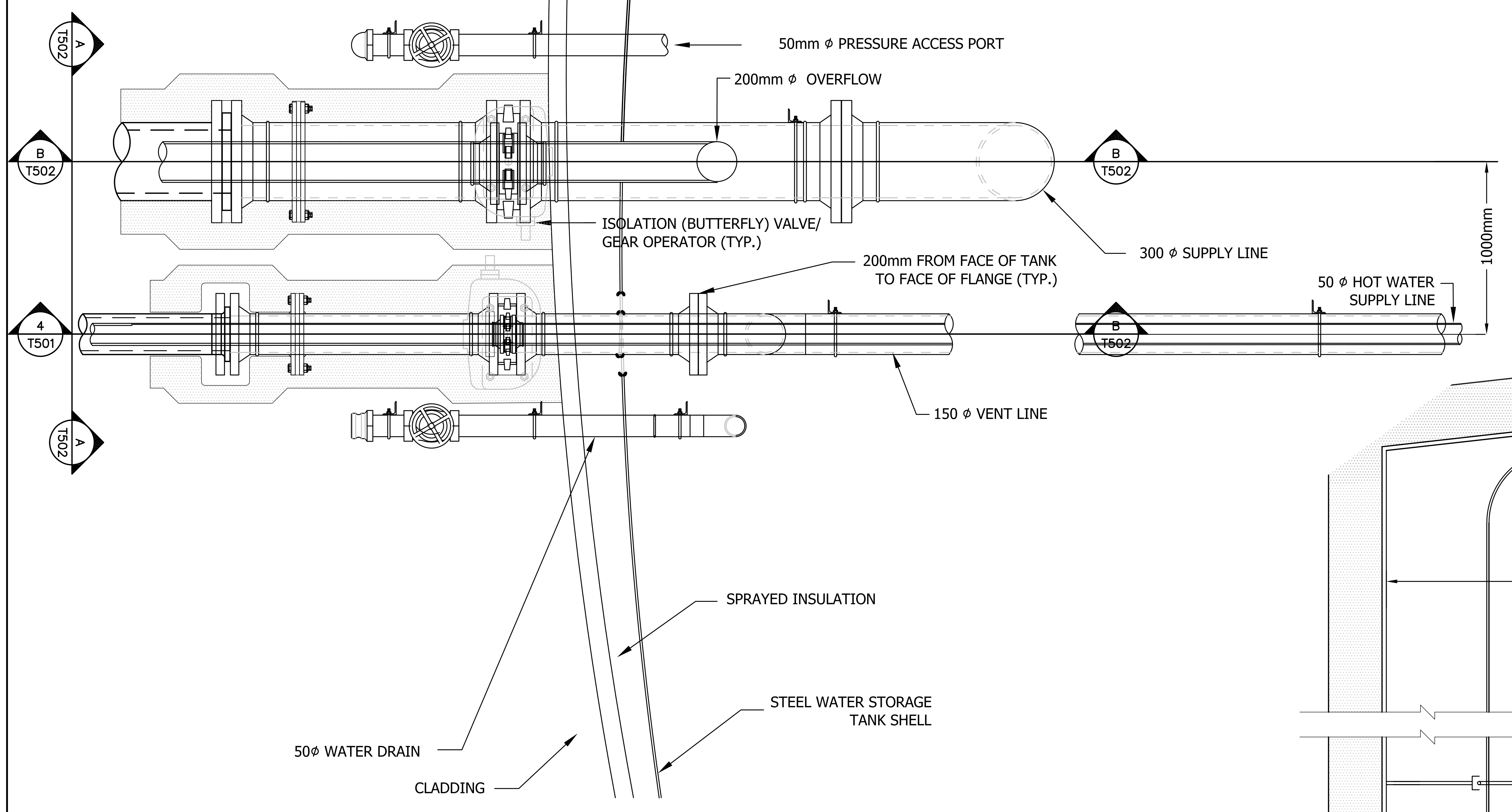

1 T502 VALVE BOX PIPING
SCALE: NTS

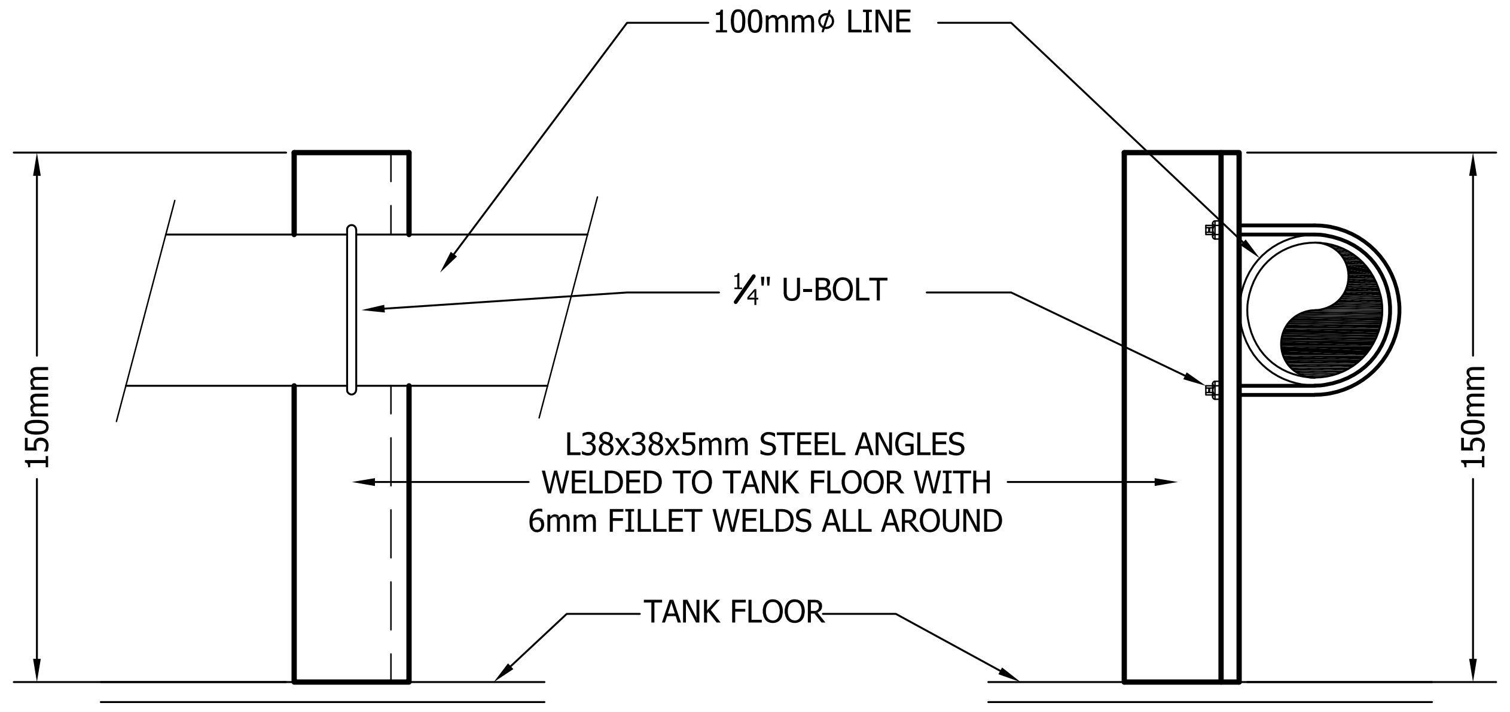

2 T502 SUPPORT BRACKET DETAIL
SCALE: NTS

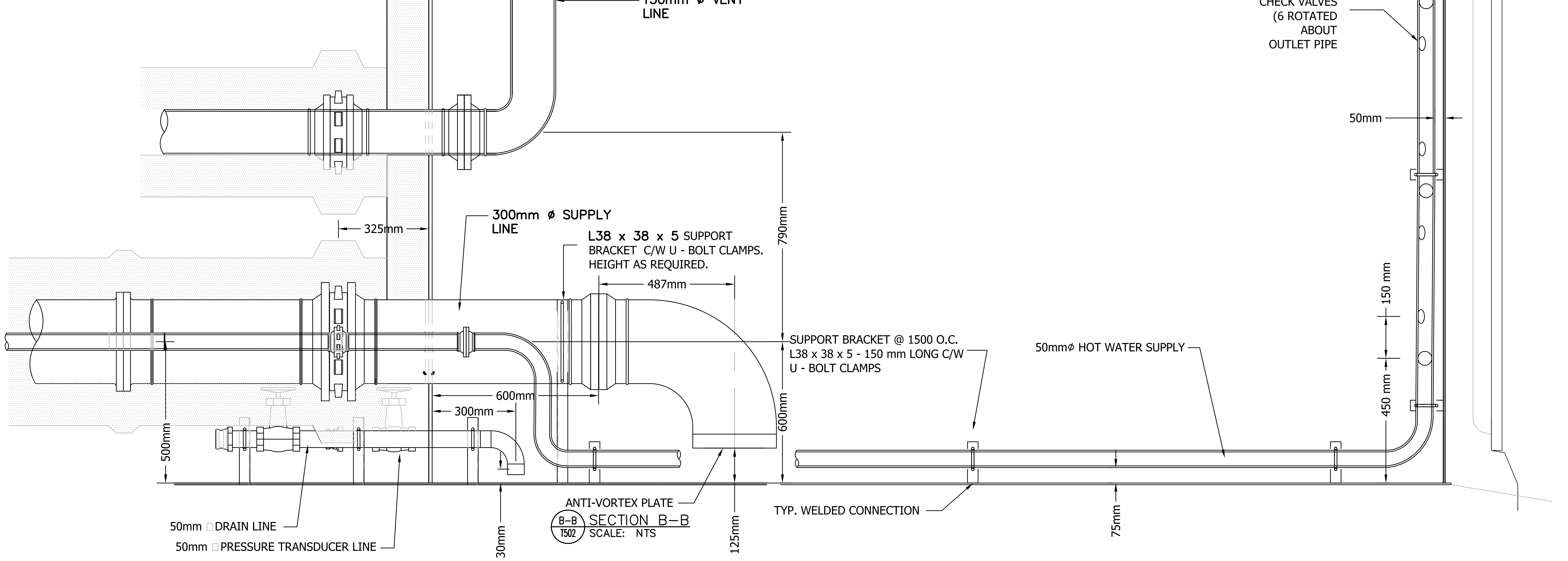

B–B T502 SECTION B–B
SCALE: NTS

0 INITIAL SUBMISSION	KC	WO	18.02.22
Revision	By	Appd.	YY.MM.DD

A PRELIMINARY	KC	WO	18.02.22
Issued	By	Appd.	YY.MM.DD

V:\01-656\active\1101\110126057\06_drawings\civil\110126057_T301_T501-502.dwg
2018/02/26 11:51 AM By: Corcoran, Kevin

ORIGINAL SHEET - ISO A1

NOT FOR CONSTRUCTION

Permit-Seal

KAVIK·STANTEC
Airport Road
Inuvik, NT
www.stantec.com

The Contractor shall verify and be responsible for all dimensions. DO NOT scale the drawing - any errors or omissions shall be reported to Stantec without delay.
The Copyrights to all designs and drawings are the property of Stantec. Reproduction or use for any purpose other than that authorized by Stantec is forbidden.

Client/Project
INUVIK
TOWN OF INUVIK, NT
NEW WATER STORAGE RESERVOIR
Inuvik, Northwest Territories/Canada

File Name: 110126057_T301_T501-502.DWG	KC	LM	WO	18.02.22
	Dwn.	Chkd.	Dsgn.	YY.MM.DD

Title
WATER TANK DETAILS
SHEET 2 OF 2

Project No.	Scale	
110126057	AS SHOWN	
Drawing No.	Sheet	Revision
T502	of	0